Austrian Institute of Construction Engineering
Schenkenstrasse 4 | T +43 1 533 65 50
1010 Vienna | Austria | F +43 1 533 64 23
www.oib.or.at | mail@oib.or.at

Designated according to Article 29 of Regulation (EU) No 305/2011

Member of EOTA
www.eota.eu

# European Technical Assessment

# ETA-13/0516
## of 04.11.2022

General part

| | |
|---|---|
| **Technical Assessment Body issuing the European Technical Assessment** | Österreichisches Institut für Bautechnik (OIB)<br>Austrian Institute of Construction Engineering |
| **Trade name of the construction product** | Hilti Firestop Cable Transit CFS-T |
| **Product family to which the construction product belongs** | Fire Stopping and Fire Sealing Products: Penetration Seals |
| **Manufacturer** | Hilti AG<br>Feldkircherstrasse 100<br>9494 Schaan<br>LIECHTENSTEIN |
| **Manufacturing plant** | Hilti production plant 5<br>Hilti production plant 25<br>Hilti production plant 32 |
| **This European Technical Assessment contains** | 71 pages including Annexes A to D which form an integral part of this assessment. |
| **This European Technical Assessment is issued in accordance with Regulation (EU) No 305/2011, on the basis of** | European Assessment Document<br>EAD 350454-00-1104 “Fire stopping and fire sealing products – Penetration seals” |
| **This European Technical Assessment replaces** | European Technical Assessment ETA-13/0516, issued on 19.12.2019 |

This European Technical Assessment is not to be transferred to manufacturers or agents of manufacturer other than those indicated on page 1, or manufacturing plants other than those laid down in the context of this European Technical Assessment.

Translations of this European Technical Assessment in other languages shall fully correspond to the original issued document and should be identified as such.

Communication of this European Technical Assessment, including transmission by electronic means, shall be in full. However, partial reproduction can be made with the written consent of the Österreichisches Institut für Bautechnik. In this case, partial reproduction has to be designated as such.

This European Technical Assessment may be withdrawn by the Österreichisches Institut für Bautechnik, in particular pursuant to information by the Commission according to Article 25 (3) of Regulation (EU) No 305/2011.

**Content**

Specific parts

## 1 Technical description of the product

"Hilti Firestop Cable Transit CFS-T" is a kit to be used as a cable- and/or pipe penetration seal (mixed penetration seal) and is designed as a modular system, based on the following components:

| Components of "Hilti Firestop Cable Transit CFS-T" | Characteristics |
|---|---|
| Frames for rectangular openings | made of electrolytical galvanised steel / hot dip galvanised steel / stainless steel;<br>SB Frame (cast in) as single or multiple frame or SBO Frame (surface mounted) as single or multiple frame;<br>the SB, SBO or SBF frames are available as single frame in minimum sizes from 120 x 101 mm (CFS-T SB 2x1 or CFS-T SBO 2x1 or CFS-T SBF 2x1) up to multiple frame in maximum size of 504 x 562 mm (CFS-T SB 8+8x4 or CFS-T SBO 8+8x4 or CFS-T SBF 8+8x4);<br>the SBS or SBSSO frames are available as single frame in minimum sizes from 190 x 230 mm (CFS-T SBS 4x1 or CFS-T SBSO 4x1) up to maximum size of 595 x 347 mm (CFS-T SBS 8x4 and CFS-T SBSO 8x4) and maximum size of 582 x 262 mm (CFS-T SBS 8+8x2 and CFS-T SBSO 8+8x2); for details see Annex B of the ETA |
| Frames for circular openings | made of mild steel primed (MSP) / stainless steel;<br>SLF Frame (surface mounted) as single frame; available in sizes from Ø 50 mm to Ø 200 mm, for details see Annex B of the ETA |
| Plug seals | circular plug seals (CFS-T RR, CFS-T RRS, CFS-T RR Vario, CFS-T RR Vario (H), CFS-T RR3) made of elastomeric rubber with bolts and fittings made of galvanised steel / stainless steel; for details see Annex B of the ETA |
| Cable transit modules | consists of halogen free elastomeric rubber (HFE); available in different sizes depending on the individual penetration seal diameters; for more details see Annex B of the ETA |
| Filler blocks | block shaped product based on EPDM rubber material; available in different sizes depending on the individual penetration seal diameters; for more details see Annex B of the ETA |
| Compression unit | consists of a wedge seal (made of galvanised steel / stainless steel), anchor plates made of galvanised steel / stainless steel) and a lubricant; for more details see Annex B of the ETA |

| Components of "Hilti Firestop Cable Transit CFS-T" | Characteristics |
|---|---|
| Sealing strip | CFS-T SST is intended to be used to reduce the annular gap between Hilti CFS-T RR Vario, Hilti CFS-T RR Vario (H), Hilti CFS-T RR3 and the supporting construction. Nominal 60 mm wide by 1 or 4 mm thick sealing strip may be wrapped around the outer periphery of the EPDM core before installing the Plug Seal (CFS-T RR Vario / (H) or CFS-T RR3) within the opening; for details see Annex B of the ETA. |

## 2 Specification of the intended use(s) in accordance with the applicable European Assessment Document (hereinafter EAD)

### 2.1 Intended use

"Hilti Firestop Cable Transit CFS-T" is intended to be used as a cable- and / or pipe penetration seal (mixed penetration seal) to temporarily or permanently reinstate the fire resistance performance of rigid wall constructions and rigid floor constructions where they have been provided with apertures which are penetrated by various cables, conduits, metal pipes, plastic pipes and multi-layer composite pipes. Other parts or service support constructions shall not penetrate the penetration seal. Further details are given in Annex C of the ETA.

The maximum opening size of the penetration seal in walls is 504 mm x 562 mm. For more details see Annex C of the ETA.

"Hilti Firestop Cable Transit CFS-T" can be installed only in the types of separating elements as specified in the following table.

| Separating element | Construction |
|---|---|
| Rigid walls | > Concrete<br>> Minimum density 450 kg/m³ (RR Vario, RR Vario (H), RR3)<br>> Minimum density 2200 kg/m³ (SB, SBO, SBF, SBS, SBSO, RR, RRS)<br><br>> Minimum thickness 150 mm (SB, SBO, SBF, RR, RRS)<br>> Minimum thickness 200 mm (SBS, SBSO, RR Vario, RR Vario (H), RR3)<br><br>> The rigid wall shall be classified in accordance with EN 13501-2 for the required fire resistance period |
| Rigid floors | > Concrete<br>> Minimum density 650 kg/m³ (RR Vario, RR Vario (H), RR3)<br>> Minimum density 2200 kg/m³ (SB, SBO, SBF, SBS, SBSO, RR, RRS)<br><br>> Minimum thickness 150 mm (SBS, SBSO)<br>> Minimum thickness 200 mm (SB, SBO, SBF, RR, RRS, RR Vario, RR Vario (H), RR3)<br><br>> The rigid floor shall be classified in accordance with EN 13501-2 for the required fire resistance period |

This European Technical Assessment does not cover sandwich panel constructions.

## 2.2 Use condition

"Hilti Firestop Cable Transit CFS-T" is intended for external use with exposure to rain and UV and can therefore – according to EAD 350454-00-1104 clause 2.2.9.3.1 – be categorized as Type X. Since the requirements for Type X are met, also the requirements for Type $Y_1$, $Y_2$, $Z_1$ and $Z_2$ are fulfilled.

## 2.3 Working life

The provisions made in this European Technical Assessment are based on an assumed working life of "Hilti Firestop Cable Transit CFS-T" of 10 years, provided the conditions laid down in the technical literature of the manufacturer relating to packaging, transport, storage, installation, use and repair are met.

The indications given on the intended working life cannot be interpreted as a guarantee given by the producer or the Technical Assessment Body, but are to be regarded only as a means for selecting the appropriate product in relation to the expected economically reasonable working life of the works.

The real working life might be, in normal use conditions, considerably longer without major degradation affecting the Basic requirements for construction works.

## 2.4 General assumptions

It is assumed that

- damages to the penetration seal are repaired accordingly,
- the installation of the penetration seal does not affect the stability of the adjacent building element – even in case of fire,
- the lintel or floor above the penetration seal is designed structurally and in terms of fire protection such that no additional mechanical load (other than its own weight) is imposed on the penetration seal,
- the installations are fixed to the adjacent building element in accordance with the relevant regulations in such a way that, in case of fire, no additional mechanical load is imposed to the penetration seal,
- the support of the installations is maintained for the required period of fire resistance and
- pneumatic dispatch systems, compressed air systems, etc. are switched off by additional means in case of fire.

2.4.1 This European Technical Assessment does not address any risks associated with the emission of dangerous liquids or gases caused by failure of the pipe(s) in case of fire nor does it prove the prevention of the transmission of fire through heat transfer via the medium in the pipes.

2.4.2 This European Technical Assessment does not verify the prevention of destruction of adjacent building elements with fire separating function or of the pipes themselves due to distortion forces caused by extreme temperatures. These risks shall be accounted for by taking appropriate measures when designing or installing the pipe work.

The mounting or hanging of the pipes or the layout of the pipe work shall be implemented in such a way that the pipes and the fire resistant building elements shall remain functional within a period of time which corresponds to the fire resistance period required.

2.4.3 The risk of downward spread of fire caused by burning material which drips through a pipe to floors below, is not considered in this European Technical Assessment.

2.4.4 The durability assessment does not take account of the possible effect on the penetration seal of substances permeating through the pipe walls.

2.4.5 The assessment does not cover the avoidance of destruction of the penetration seal or of the adjacent building element(s) by forces caused by temperature changes in case of fire. This has to be considered when designing the piping system.

## 2.5 Manufacturing

The European Technical Assessment is issued for the product on the basis of agreed data / information, deposited with the Österreichisches Institut für Bautechnik, which identifies the product that has been assessed and judged. Changes to the product or production process, which could result in this deposited data / information being incorrect, should be notified to the Österreichisches Institut für Bautechnik before the changes are introduced.

The Österreichisches Institut für Bautechnik will decide whether or not such changes affect the European Technical Assessment and consequently the validity of the CE marking on the basis of the European Technical Assessment and if so whether further assessment or alterations to the European Technical Assessment, shall be necessary.

## 3 Performance of the product and references to the methods used for its assessment

| Basic requirements for construction works | Essential characteristic | Method of verification | Performance |
|---|---|---|---|
| **BWR 2** | Reaction to fire | EN 13501-1: 2007+A1:2009 | Clause 3.1.1 of the ETA |
| | Resistance to fire | EN 13501-2: 2007+A1:2009 / EN 13501-2: 2016 | Clause 3.1.2 and Annex C.1 to C.8 of the ETA |
| **BWR 3** | Air permeability | EN 1026:2000 | Clause 3.2.1 of the ETA |
| | Water permeability | Annex C of EAD 350454-00-1104 | Clause 3.2.2 of the ETA |
| | Content, emission and/or release of dangerous substances | No performance assessed | |
| **BWR 4** | Mechanical resistance and stability | EOTA TR001 | Clause 3.3.1 of the ETA |
| | Resistance to impact / movement | EOTA TR001 | Clause 3.3.2 of the ETA |
| | Adhesion | No performance assessed | |
| | Durability | EAD 350454-00-1104 clause 2.2.9 | Clause 3.3.4 of the ETA |
| **BWR 5** | Airborne sound insulation | No performance assessed | |
| **BWR 6** | Thermal properties | No performance assessed | |
| | Water vapour permeability | No performance assessed | |

### 3.1 Safety in case of fire (BWR 2)

#### 3.1.1 Reaction to fire

The components of “Hilti Firestop Cable Transit CFS-T” were assessed according to EAD 350454-00-1104 clause 2.2.1 and classified according to EN 13501-1:2007+A1:2009. The reaction to fire classification of “Hilti Firestop Cable Transit CFS-T” is “E”.

#### 3.1.2 Resistance to fire

“Hilti Firestop Cable Transit CFS-T” was tested according to EAD 350454-00-1104 clause 2.2.2, EN 1363-1, EN 1366-3:2009 and FprEN 1366-3:2021.

Based upon the gained test results and the field of application specified within EN 1363-1, EN 1366-3:2009 and FprEN 1366-3:2021 the penetration seal “Hilti Firestop Cable Transit CFS-T” has been classified according to EN 13501-2:2016. The individual fire resistance classes are listed in Annex C.1 to C.8 of the ETA.

The maximum fire resistance class of the penetration seal in vertical or horizontal separating element depends on the fire resistance class of the penetrating elements. The fire resistance class of the penetration seal is reduced to the fire resistance class of the penetrating element with the lowest fire resistance classification.

The classifications are not valid for sandwich panel constructions.

## 3.2 Hygiene, health and the environment (BWR 3)

### 3.2.1 Air permeability

The air permeability of “Hilti Firestop Cable Transit CFS-T” was tested as a blank penetration seal according to EAD 350454-00-1104 clause 2.2.3 under application of the test principles of EN 1026.

| Pressure [Pa] | 50 | 100 | 150 | 200 | 250 | 300 | 450 | 600 |
|---|---|---|---|---|---|---|---|---|
| q/A air [m³/(h·m²)] | impermeable | | | | | | | |

### 3.2.2 Water permeability

The water permeability of “Hilti Firestop Cable Transit CFS-T” has been tested according to Annex C of EAD 350454-00-1104. Test result: Water tight to 1000 mm (SB-SBO single window-SBF-SBS-SBSO) and 10000 mm (RR Vario-RR3) head of water.

### 3.2.3 Content, emission and/or release of dangerous substances

No performance assessed.

## 3.3 Safety and accessibility in use (BWR 4)

### 3.3.1 Mechanical resistance and stability

See clause 3.3.2 below.

### 3.3.2 Resistance to impact / movement

In impact tests according to EOTA TR001 the requirements for the highest risk zone type (Type IV) have been fulfilled as defined for internal walls in EOTA TR 001 A.1 for:

- Safety in use/Internal Walls (500 Nm soft body impact, 10 Nm hard body impact)
- Serviceability/Internal Walls (120 Nm soft body impact, 6 Nm hard body impact)
- Safety in use/Roofs/Ceilings (1200 Nm soft body impact, 10 Nm hard body impact)
- Serviceability/Roofs/Ceilings (1200 Nm soft body impact, 6 Nm hard body impact)
- Safety in use/Floors (1200 Nm soft body impact, 10 Nm hard body impact)
- Serviceability/Floors (1200 Nm soft body impact, 6 Nm hard body impact)

### 3.3.3 Adhesion

No performance assessed.

### 3.3.4 Durability

All components of “Hilti Firestop Cable Transit CFS-T” fulfil the requirements for the intended use category.

“Hilti Firestop Cable Transit CFS-T” is therefore appropriate for use in conditions exposed to weathering with exposure to UV and rain and can – according to EAD 350454-00-1104 clause 2.2.9.3.1 – be categorized as Type X. Since the requirements for Type X are met, also the requirements for Type $Y_1$, $Y_2$, $Z_1$ and $Z_2$ are fulfilled.

### 3.4 Protection against noise (BWR 5)

3.4.1 Airborne sound insulation

No performance assessed.

### 3.5 Energy economy and heat retention (BWR 6)

3.5.1 Thermal properties

No performance assessed.

3.5.2 Water vapour permeability

No performance assessed.

## 4 Assessment and verification of constancy of performance (hereinafter AVCP) system applied, with reference to its legal base

According to the Decision 1999/454/EC[1], amended by Decision 2001/596/EC[2] of the European Commission the system(s) of assessment and verification of constancy of performance (see Annex V of Regulation (EU) No 305/2011) is given in the following table.

| **Product(s)** | **Intended use(s)** | **Level(s) or class(es)** (resistance to fire) | **System** of assessment and verification of constancy of performance |
|---|---|---|---|
| Fire Stopping and Fire Sealing Products | for fire compartmentation and/or fire protection or fire performance | any | 1 |

In addition, according to the Decision 1999/454/EC, amended by Decision 2001/596/EC of the European Commission the system(s) of assessment and verification of constancy of performance, with regard to reaction to fire, is given the following table.

| **Product(s)** | **Intended use(s)** | **Level(s) or class(es)** (reaction to fire) | **System** of assessment and verification of constancy of performance |
|---|---|---|---|
| Fire Stopping and Fire Sealing Products | For uses subject to regulations on reaction to fire | A1*, A2*, B*, C* | 1 |
| | | A1**, A2**, B**, C**, D, E | 3 |
| | | (A1 to E)***, F | 4 |

* Products/materials for which a clearly identifiable stage in the production process results in an improvement of the reaction to fire classification (e.g. an addition of fire retardants or a limiting of organic material)

** Products/materials not covered by footnote (*)

*** Products/materials that do not require to be tested for reaction to fire (e.g. products/materials of class A1 according to Commission Decision 96/603/EC, as amended)

[1] Official Journal of the European Communities no. L 178, 14.7.1999, p. 52
[2] Official Journal of the European Communities no. L 209, 2.8.2001, p. 33

## 5 Technical details necessary for the implementation of the AVCP system, as provided for in the applicable EAD

Technical details necessary for the implementation of the AVCP system are laid down in the control plan deposited with the Technical Assessment Body Österreichisches Institut für Bautechnik.

The notified product certification body shall visit the factory at least twice a year for surveillance of the manufacturer.

Issued in Vienna on 04.11.2022
by Österreichisches Institut für Bautechnik

The original document is signed by:

Rainer Mikulits
Managing Director

## ANNEX A - REFERENCE DOCUMENTS

### A.1 References to standards mentioned in the ETA

| | |
|---|---|
| EN 1026 | Windows and doors – Air permeability – Test method |
| EN 1363-1 | Fire resistance tests – Part 1: General Requirements |
| EN 1366-3 | Fire resistance tests for service installations - Part 3: Penetration seals |
| EN 13501-1 | Fire classification of construction products and building elements – Part 1: Classification using test data from reaction to fire tests |
| EN 13501-2 | Fire classification of construction products and building elements – Part 2: Classification using test data from fire resistance tests |
| EN 14303 | Thermal insulation products for building equipment and industrial installations – Factory made mineral wool (MW) products - Specification |

### A.2 Other reference documents

| | |
|---|---|
| EOTA TR 001 | Determination of impact resistance of panels and panel assemblies |
| EOTA TR 024 | Characterisation, Aspects of Durability and Factory Production Control for Reactive Materials, Components and Products |

## ANNEX B - DESCRIPTION OF THE PRODUCT(S) AND ANCILLARY PRODUCT(S)

**Table B.1 - Frames:**

| System component | Type element (min-max) | Frame range outer dimension (min-max, mm) | Recommended opening size (Ø, mm) |
|---|---|---|---|
| Frame SB | Single: min. CFS-T SB 2x1<br>max. CFS-T SB 8x1<br>Multiple: min. CFS-T SB 4x2<br>max. CFS-T SB 8+8x4 | 181x240 – 357x240<br>240x368 – 624x642 | 120x101 – 120x277<br>248x160 – 504x562 |
| Frame SBO | Single: min. CFS-T SBO 2x1<br>max. CFS-T SBO 8x1<br>Multiple: min. CFS-T SBO 4x2<br>max. CFS-T SBO 8+8x4 | 181x240 – 357x240<br>240x368 – 624x642 | 120x101 – 120x277<br>248x160 – 504x562 |
| Frame SBF | Single: min. CFS-T SBF 2x1<br>max. CFS-T SBF 8x1<br>Multiple: min. CFS-T SBF 4x2<br>max. CFS-T SBF 8+8x4 | 232x251 – 408x251<br>291x379 – 693x635 | 120x101 – 120x277<br>248x160 – 504x562 |
| Frame SBS | Single: min. CFS-T SBS 4x1<br>max. CFS-T SBS 8x1<br>Multiple: min. CFS-T SBS 4x2<br>max. CFS-T SBS 8x4<br>max. CFS-T SBS 8+8x2 | 190x230 – 190x347<br>325x230 – 595x347-582x262 | Cast in only<br>Cast in only |
| Frame SBSO | Single: min. CFS-T SBSO 4x1<br>max. CFS-T SBSO 8x1<br>Multiple: min. CFS-T SBSO 4x2<br>max. CFS-T SBSO 8x4<br>max. CFS-T SBSO 8+8x2 | 190x230 – 190x347<br>325x230 – 595x347-582x262 | Cast in only<br>Cast in only |
| Frame SLF | Min.: CFS-T SLF 50<br>Max.: CFS-T SLF 200 | Ø 57x3,2 –<br>Ø 219,1x1,8 | – |

**Table B.2 - Plug Seals:**

| System component | Type element (min-max) | Recommended opening size (Ø, mm) |
|---|---|---|
| Plug seals | Min.: CFS-T RR-50<br>Max.: CFS-T RR-200 | Ø 50–51 / Ø 200-205 |
| | Min.: CFS-T RRS-43<br>Max.: CFS-T RRS-100 | Ø 43-45 / Ø 100-103 |
| | Min.: CFS-T RR Vario-60<br>Max.: CFS-T RR Vario-300 | Ø 61-64 / Ø 301-304 |
| | Min.: CFS-T RR Vario (H)-60<br>Max.: CFS-T RR Vario (H)-300 | Ø 61-64 / Ø 301-304 |
| | Min.: CFS-T RR3-150<br>Max.: CFS-T RR3-200 | Ø 151-152 / Ø 201-202 |

**Table B.3 - Modules, Filler blocks:**

| System component | Type element | Type element (min-max) |
|---|---|---|
| Cable Transit modules | SB, SBO, SBF | Min.: CFS-T 15/0+3-9,<br>CFS-T 20/0+5-12,<br>CFS-T 30/0+13-23,<br>CFS-T 40/0+23-33,<br>CFS-T 60/0+34-51,<br>CFS-T 90/0+52-78,<br>Max.: CFS-T 120/0+79-99 |
| | | Min.: CFS-T 15/3, 4, 5, 6, 7, 8, 9,<br>CFS-T 20/4, 5, 6, 7, 8, 9, 10, 11, 12, 13, 14, 15, 16,<br>CFS-T 30/12, 13, 14, 15, 16, 17, 18, 19, 20, 21, 22, 23, 24,<br>Max.: CFS-T 40/22, 23, 24, 25, 26, 27, 28, 29, 30, 31, 32, 33, 34 |
| | SBS, SBSO | Min.: CFS-T SBS 20/0+5-12,<br>CFS-T SBS 20/0+5-16<br>CFS-T SBS 2x15/0+3-5<br>CFS-T SBS 2x15/0+6-7<br>CFS-T SBS 30/0+13-23<br>CFS-T SBS 40/0+23-33,<br>CFS-T SBS SM 40/21-33<br>CFS-T SBS SM 60/33-51<br>Max.: CFS-T SBS SM 90/52, 53, 54, 55, 56, 57, 58, 59, 60, 61, 62, 63, 64, 65, 66, 67, 68, 69, 70, 71, 72, 73, 74, 75, 76, 77, 78, 79, 80 |
| | | Min.: CFS-T SBS 15/3, 4, 5, 6, 7, 8, 9,<br>CFS-T SBS 20/4, 5, 6, 7, 8, 9, 10, 11, 12, 13, 14, 15, 16,<br>CFS-T SBS 30/12, 13, 14, 15, 16, 17, 18, 19, 20, 21, 22, 23, 24,<br>Max.: CFS-T SBS 40/22, 23, 24, 25, 26, 27, 28, 29, 30, 31, 32, 33, 34, |
| Filler blocks | SB, SBO, SBF | Min.: CFS-T FB 12x10/0,<br>CFS-T FB 24x5/0<br>CFS-T FB 15/0,<br>CFS-T FB 20/0,<br>Max.: CFS-T FB 30/0 |
| | SBS, SBSO | Min.: CFS-T FB SBS 12x10/0,<br>CFS-T FB SBS 24x5/0<br>CFS-T FB SBS 15/0,<br>CFS-T FB SBS 20/0,<br>Max.: CFS-T FB SBS 30/0 |

**Table B.4 - Wedge seals, anchor plates, sealing strips:**

| System component | Type element | Description |
|---|---|---|
| Wedge seals & Anchor plates | SB, SBO, SBF | CFS-T WD 120 GS (galvanized)<br>CFS-T WD 120 S/S (stainless steel) |
| Wedge seals | SBS, SBSO | CFS-T WD 120 SBS GS (galvanized)<br>CFS-T WD 120 SBS S/S (stainless steel) |
| Anchor plate set | SB, SBO, SBF | CFS-T AP 120 GS (galvanized)<br>CFS-T AP 120 S/S (stainless steel)<br>CFS-T LAP 120 GS (galvanized) |
| | SBS, SBSO | CFS-T LAP SBS 120 GS (galvanized)<br>CFS-T LAP SBS 120 S/S (stainless steel) |
| Fixing anchor plate set | SB, SBO, SBF | CFS-T FAP 120 S/S (stainless steel) |
| Sealing strip | RR, RRS, RR Vario, RR Vario (H), RR3 | CFS-T SST 60x1x720 HFE (halogen free elastomer)<br>CFS-T SST 60x4x720 HFE (halogen free elastomer) |

## B.1 Product: SB series

### B.1.1 System description

The modular system Type “Hilti Firestop Cable Transit CFS-T SB” consists of two cast in flanged steel combination frame installed flush to surface, stone wool insulation, elastomeric rubber modules, wedge compression kit and lubricant.

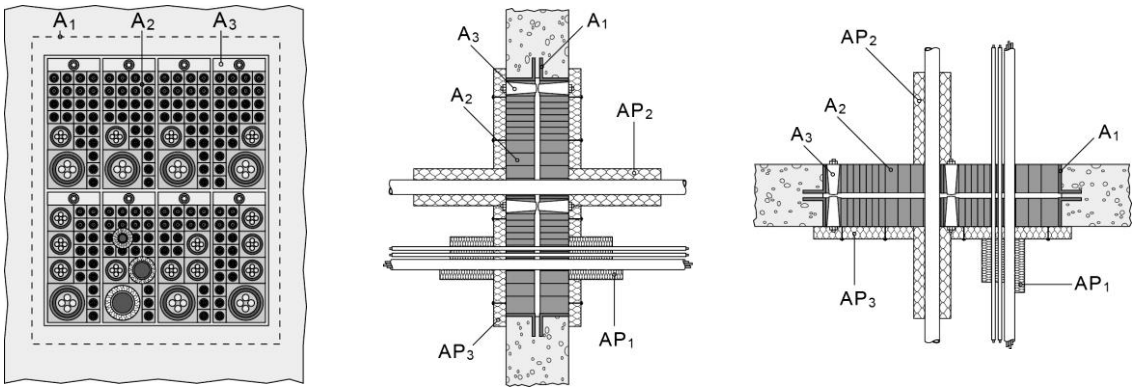


Frame ($A_1$):

- Material: electrolytical galvanized steel, Type - Hilti Transit frame CFS-T SB (integrated)
- Max. dimensions: 624 mm x 644 mm x 60 mm height (type CFS-T SB 8+8x4)
- Position: casted inside the wall/floor, flush with the surface on both sides of the wall/floor (two frames are placed back to back on an intermediate distance of 30 mm (wall) or 80 mm (floor))

Module ($A_2$):

- Material: flexible, non-flammable, halogen free elastomeric rubber (HFE)
- Types: See overview in table B.3 of the ETA
  Selection according diameter of penetration
- Position: inside the rectangular opening(s) of the frame
- Possible additional parts: core module and filler module used for blank seals and for sealing between cables and basic modules
- Number of modules depending on penetrations

Wedge compression kit ($A_3$):

- Material: galvanized steel, Type - Hilti CFS-T WD 120 GS wedge compression kit
- Comprising: anchor plates, fixing anchor plate and wedge seal
- Position: inside the rectangular opening(s) of the frame
- Fixed: clamped by tightening the bolt in the wedge seal

Seal insulation:

Cable insulation ($AP_1$):

- Material: stone wool according Annex B, table B.15.1 of the ETA with density of 80 kg/m³ and a thickness of 30 mm
- Position: insulation on the cables, additional to the seal insulation, on both sides of the wall / on lower side of the floor
- Fixed: with steel gauze (thickness 0,7 mm). Insulation lengths of the cables see Annex C of the ETA

Pipe insulation ($AP_2$):

- Material: stone wool according Annex B, table B.15.2 of the ETA, thickness see Annex C of the ETA
- Position: insulation on the pipe, additional to the seal insulation, on both sides of the wall / on lower side of the floor
- Insulation lengths of the pipes see Annex C of the ETA

Steel frame insulation ($AP_3$):

- Material: stone wool according Annex B, table B.15.1 of the ETA with density of 80 kg/m³ and a thickness of 30 mm
- Position: on the seal (including frame if present), on both sides of the wall/ on lower side of the floor
- Fixed: with pins (diameter 4 mm) and washers

B.1.2 Seal size

Range: min. 120 mm x 101 mm (CFS-T SB 2x1) to max. 504 mm x 562 mm (CFS-T SB 8+8x4)

B.1.3 Number of penetrations

Depends on selected frame type, details given in Annex C of the ETA

## B.2 Product: SBO series

B.2.1 System description

The modular system Type “Hilti Firestop Cable Transit CFS-T SBO” consists of two surface mounted flanged steel combination frame, stone wool insulation, elastomeric rubber modules, wedge compression kit and lubricant.

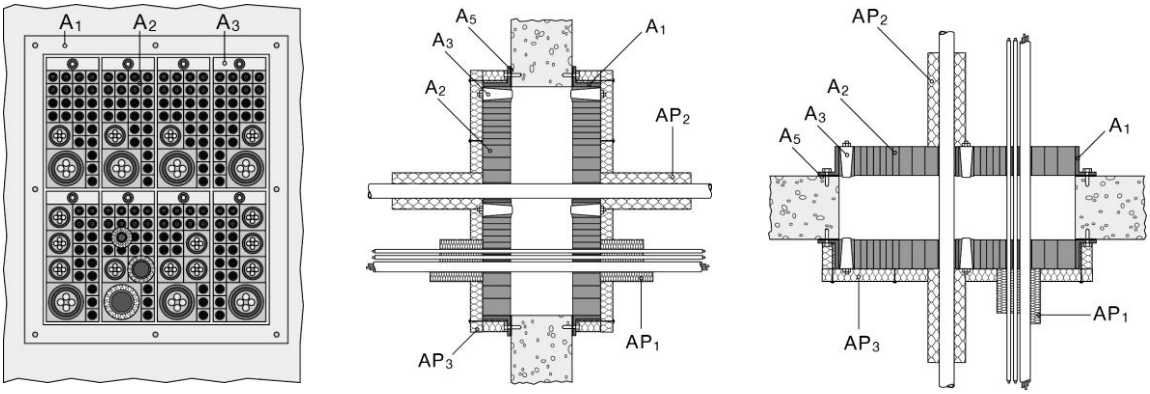


Frame ($A_1$):

- Material: electrolytical galvanized steel, Type - Hilti Transit frame CFS-T SBO (surface mounted)
- Max. dimensions: 624 mm x 644 mm x 60 mm height (type CFS-T SBO 8+8x4)
- Position: surface mounted both sides of the wall/floor
- Fixed: with anchor bolts to the wall/floor

Smoke tightness between frame and support construction according Annex B.8 of the ETA.

Module ($A_2$):

- Material: flexible, non-flammable, halogen free elastomeric rubber (HFE)
- Types: See overview in table B.3 of the ETA
  Selection according diameter of penetration
- Position: inside the rectangular opening(s) of the frame
- Possible additional parts: core module and filler module used for blank seals and for sealing between cables and basic modules
- Number of modules depending on penetrations

Wedge compression kit ($A_3$):

- Material: galvanized steel, Type - Hilti CFS-T WD 120 GS wedge compression kit
- Comprising: anchor plates, fixing anchor plate and wedge seal
- Position: inside the rectangular opening(s) of the frame
- Fixed: clamped by tightening the bolt in the wedge seal

Seal insulation:

Cable insulation ($AP_1$):

- Material: stone wool according Annex B, table B.15.1 of the ETA with density of 80 kg/m³ and a thickness of 30 mm
- Position: insulation on the cables, additional to the seal insulation, on both sides of the wall / on lower side of the floor
- Fixed: with steel gauze (thickness 0,7 mm). Insulation lengths of the cables see Annex C of the ETA

Pipe insulation ($AP_2$):

- Material: stone wool according Annex B, table B.15.2 of the ETA, thickness see Annex C of the ETA
- Position: insulation on the pipe, additional to the seal insulation, on both sides of the wall / on lower side of the floor
- Insulation lengths of the pipes see Annex C of the ETA

Steel frame insulation ($AP_3$):

- Material: stone wool according Annex B, table B.15.1 of the ETA with density of 80 kg/m³ and a thickness of 30 mm
- Position: on the seal (including frame if present), on both sides of the wall / on lower side of the floor
- Fixed: with pins (diameter 4 mm) and washers

B.2.2 Seal size

Range: min. 120 mm x 101 mm (CFS-T SBO 2x1) to max. 504 mm x 562 mm (CFS-T SBO 8+8x4)

B.2.3 Number of penetrations

Depends on selected frame type, details given in Annex C of the ETA.

## B.3 Product: SBF-Series

### B.3.1 System description

The modular system Type “Hilti Firestop Cable Transit CFS-T SBF” consists of two cast in or surface mounted flanged steel combination frame installed flush to surface, stone wool insulation, elastomeric rubber modules, wedge compression kit and lubricant.

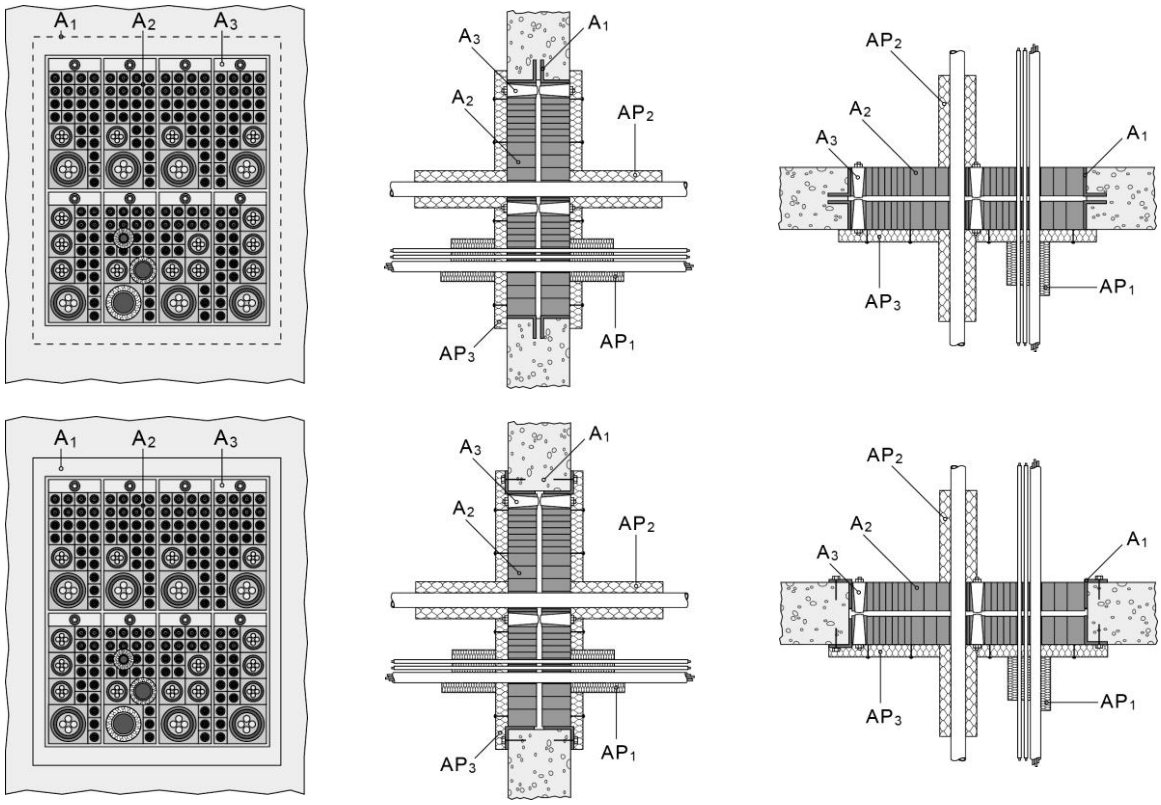


Frame ($A_1$):

- Material: Hot dip galvanized steel, Type - Hilti Transit frame CFS-T SBF (integrated)
- Max. dimensions: 693 mm x 635 mm x 60 mm height (type CFS-T SBF 8+8x4)
- Position: casted inside the wall/floor, fixed with metal bolt-/anchor on both sides of the wall/floor (two frames are placed back to back on an intermediate distance of 40 mm (wall) or 90 mm (floor))

Module ($A_2$):

- Material: flexible, non-flammable, halogen free elastomeric rubber (HFE)
- Types: See overview in table B.3 of the ETA
  Selection according diameter of penetration
- Position: inside the rectangular opening(s) of the frame
- Possible additional parts: core module and filler module used for blank seals and for sealing between cables and basic modules
- Number of modules depending on penetrations

Wedge compression kit ($A_3$):

- Material: galvanized steel, Type - Hilti CFS-T WD 120 GS wedge compression kit
- Comprising: anchor plates, fixing anchor plate and wedge seal
- Position: inside the rectangular opening(s) of the frame
- Fixed: clamped by tightening the bolt in the wedge seal

Seal insulation:

Cable insulation ($AP_1$):

- Material: stone wool according Annex B, table B.15.1 of the ETA with density of 80 kg/m³ and a thickness of 30 mm

- Position: insulation on the cables, additional to the seal insulation, on both sides of the wall / on lower side of the floor
- Fixed: with steel gauze (thickness 0,7 mm). Insulation lengths of the cables see Annex C of the ETA

Pipe insulation ($AP_2$):

- Material: stone wool according Annex B, table B.15.2 of the ETA, thickness see Annex C of the ETA
- Position: insulation on the pipe, additional to the seal insulation, on both sides of the wall / on lower side of the floor
- Insulation lengths of the pipes see Annex C of the ETA

Steel frame insulation ($AP_3$):

- Material: stone wool according Annex B, table B.15.1 of the ETA with density of 80 kg/m³ and a thickness of 30 mm
- Position: on the seal (including frame if present), on both sides of the wall / on lower side of the floor
- Fixed: with pins (diameter 4 mm) and washers

B.3.2 Seal size

Range: min. 120 mm x 101 mm (CFS-T SBF 2x1) to max. 504 mm x 562 mm (CFS-T SBF 8+8x4)

B.3.3 Number of penetrations

Depends on selected frame type, details given in Annex C of the ETA.

## B.4 Product: SBS series

### B.4.1 System description

The modular system Type “Hilti Firestop Cable Transit CFS-T SBS” consists of one cast in flanged steel combination frame installed flush to surface on one side or integrated in the middle of the wall/floor, stone wool insulation, elastomeric rubber modules, wedge compression kit and lubricant.

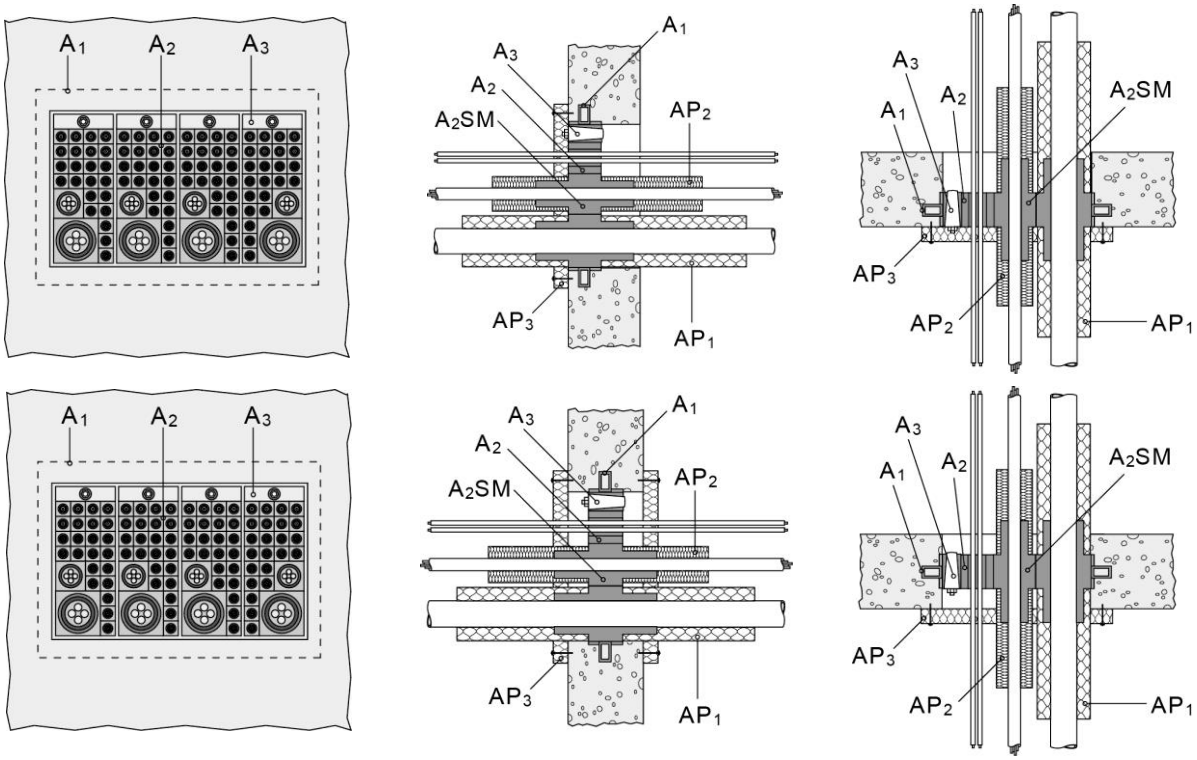


Frame ($A_1$):

- Material: hot dip galvanized steel, Type - Hilti Transit frame CFS-T SBS (cast in)
- Max. dimensions: 595 mm x 347 mm x 90 mm height (type CFS-T SBS 8x4)
- Max. dimensions: 582 mm x 262 mm x 90 mm height (type CFS-T SBS 8+8x2)
- Position: casted inside the wall/floor, flush with the surface on one side or integrated in the middle of the wall/floor.

Module ($A_2$):

- Material: flexible, non-flammable, halogen free elastomeric rubber (HFE)
- Types: See overview in table B.3 of the ETA - Selection according diameter of penetration
- Position: inside the rectangular opening(s) of the frame
- Possible additional parts: core module, super module and filler module used for blank seals and for sealing between cables and basic modules
- Number of modules depending on penetrations

Wedge compression kit ($A_3$):

- Material: galvanized steel, Type - Hilti CFS-T WD 120 SBS GS, S/S wedge compression kit
- Comprising: anchor plates, wedge seal
- Position: inside the rectangular opening(s) of the frame
- Fixed: clamped by tightening the bolt in the wedge seal

Seal insulation:

Cable insulation ($AP_1$):

- Super module CFS-T SBS SM in sizes 40, 60 and 90 covering a cable diameter range from 23 up to 80 mm
- For one cable is one module required
- Fixed: with clamps

B.4.2 Seal size

Range: min. 120 mm x 160 mm (CFS-T SBS 4x1) to max. 525 mm x 277 mm (CFS-T SBS 8x4)

B.4.3 Number of penetrations

Depends on selected frame type, details given in Annex C of the ETA.

## B.5 Product: SBSO series

B.5.1 System description

The modular system Type “Hilti Firestop Cable Transit CFS-T SBF” consists of two cast in or surface mounted flanged steel combination frame installed flush to surface, stone wool insulation, elastomeric rubber modules, wedge compression kit and lubricant.

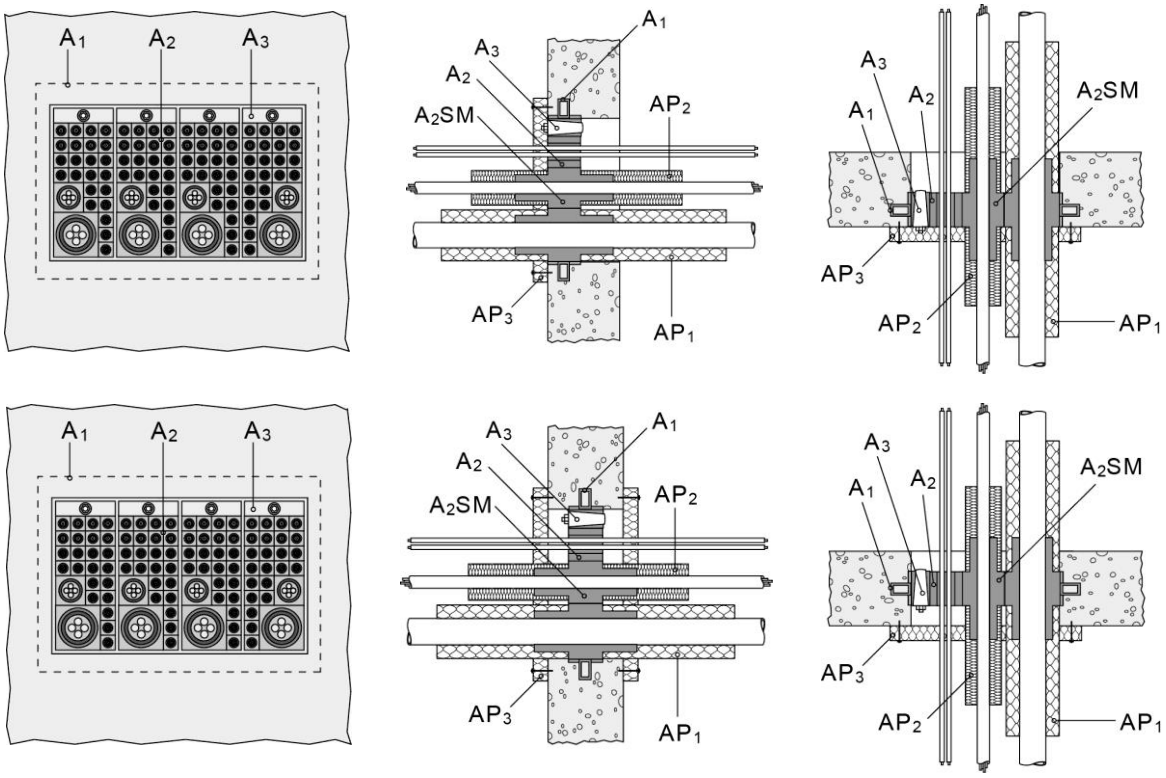


Frame ($A_1$):

- Material: electrolytical galvanized steel, Type - Hilti Transit frame CFS-T SBSO (cast in)
- Max. dimensions: 595 mm x 347 mm x 90 mm height (type CFS-T SBSO 8x4)
- Max. dimensions: 582 mm x 262 mm x 90 mm height (type CFS-T SBSO 8+8x2)
- Position: casted inside the wall/floor, flush with the surface on one side or integrated in the middle of the wall/floor.

Module ($A_2$):

- Material: flexible, non-flammable, halogen free elastomeric rubber (HFE)
- Types: See overview in table B.3 of the ETA
  Selection according diameter of penetration
- Position: inside the rectangular opening(s) of the frame
- Possible additional parts: core module, super module and filler module used for blank seals and for sealing between cables and basic modules
- Number of modules depending on penetrations

Wedge compression kit ($A_3$):

- Material: galvanized steel, Type - Hilti CFS-T WD 120 SBSO GS, S/S wedge compression kit
- Comprising: anchor plates, wedge seal
- Position: inside the rectangular opening(s) of the frame
- Fixed: clamped by tightening the bolt in the wedge seal

Seal insulation:

Cable insulation ($AP_1$):

- Super module CFS-T SBS SM in sizes 40, 60 and 90 covering a cable diameter range from 23 up to 80 mm
- For one cable is one module required
- Fixed: with clamps

B.5.2 Seal size

Range: min. 120 mm x 160 mm (CFS-T SBSO 4x1) to max. 525 mm x 277 mm (CFS-T SBSO 8x4)

B.5.3 Number of penetrations

Depends on selected frame type, details given in Annex C of the ETA.

## B.6 Product: RR series

B.6.1 System description

The modular system Type “Hilti Firestop Cable Transit CFS-T RR” consists of an elastic plug seal, stone wool insulation, elastomeric rubber modules and lubricant.

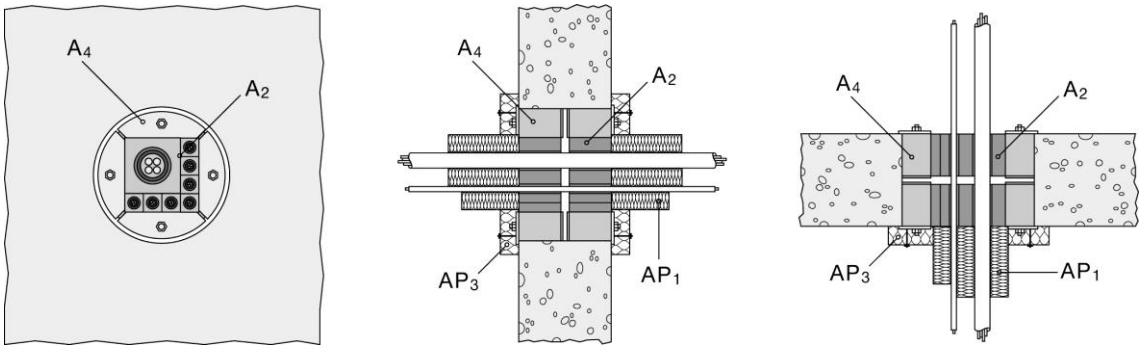


Plug seal ($A_4$):

- Material: flexible, non-flammable, halogen free elastomeric rubber (HFE)
- Max. dimensions: Ø 200 mm (type CFS-T RR 200)
- Types: Hilti CFS-T RR-50, CFS-T RR-70, CFS-T RR-100, CFS-T RR-125, CFS-T RR-150, CFS-T RR-200
- Position: inside the opening(s) of the wall/floor
- Fixed: clamped inside the wall/floor opening by tightening the bolts of the clamp plates

Module ($A_2$):

- Material: flexible, non-flammable, halogen free elastomeric rubber (HFE)
- Types: Hilti CFS-T 15, CFS-T 20, CFS-T 30, CFS-T 40, CFS-T 60, CFS-T 90,
  Hilti CFS-T FB 15, CFS-T FB 20, CFS-T FB 30
  Selection according diameter of penetration
- Position: inside the rectangular opening(s) of the frame
- Possible additional parts: core module and filler module used for blank seals and for sealing between cables and basic modules
- Number of modules depending on penetrations

Seal insulation:

Cable insulation ($AP_1$):

- Material: stone wool according to Annex B, table B.15.1 of the ETA with density of 80 kg/m³ and a thickness of 30 mm
- Position: insulation on the cables, additional to the seal insulation, on both sides of the wall / on lower side of the floor
- Fixed: with steel gauze (thickness 0,7 mm). Insulation lengths of the cables see Annex C of the ETA

Plug insulation ($AP_3$):

- Material: stone wool according to Annex B, table B.15.1 of the ETA with density of 80 kg/m³ and a thickness of 30 mm
- Position: on the plug on both sides of the wall/ on lower side of the floor
- Fixed: with pins (diameter 4 mm) and washers

B.6.2 Seal size

Range: min. Ø 50 mm (CFS-T RR-50) up to max. Ø 205 mm (CFS-T RR-200)

B.6.3 Number of penetrations

Any number of single openings Hilti CFS-T RR-50 up to Hilti CFS-T RR-200, details given in Annex C of the ETA

## B.7 Product: RR series + SLF series

B.7.1 System description

The modular system Type “Hilti Firestop Cable Transit CFS-T RR + CFS-T SLF” consists of a flanged steel sleeve, elastic plug seal, stone wool insulation, elastomeric rubber modules and lubricant.

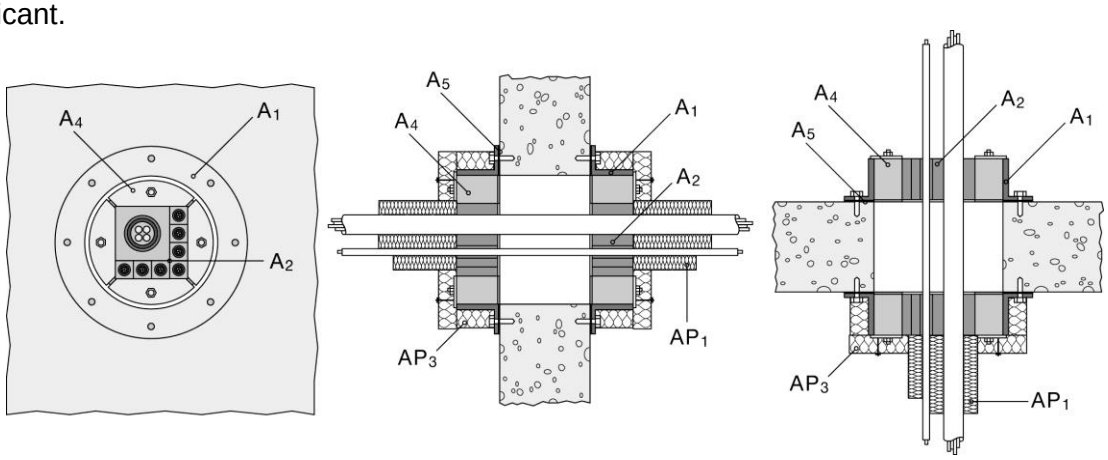


Steel Sleeve ($A_1$):

- Material: mild steel primed (MSP)
- Max. dimensions: Ø 200 mm (type CFS-T SLF 200)
- Types: Hilti CFS-T SLF 50, CFS-T SLF 70, CFS-T SLF 100, CFS-T SLF 125, CFS-T SLF 150, CFS-T SLF 200 MSP (surface mounted)
- Max. dimensions: outer diameter 320 mm, height 70 mm, thickness 5 mm and 8 mm (type CFS-T SLF 200 MSP)
- Fixed: with 4 anchor bolts to the wall/floor

Smoke tightness between frame and support construction according Annex B.8 of the ETA.

Plug seal ($A_4$):

- Material: flexible, non-flammable, halogen free elastomeric rubber (HFE)
- Max. dimensions: Ø 200 mm (type CFS-T RR 200)
- Types: Hilti CFS-T RR-50, CFS-T RR-70, CFS-T RR-100, CFS-T RR-125, CFS-T RR-150, CFS-T RR-200
- Position: inside the steel sleeve of the wall/floor
- Fixed: clamped inside the steel sleeve opening by tightening the bolts of the clamp plates

Module ($A_2$):

- Material: flexible, non-flammable, halogen free elastomeric rubber (HFE)
- Types: Hilti CFS-T 15, CFS-T 20, CFS-T 30, CFS-T 40, CFS-T 60, CFS-T 90, Hilti CFS-T FB 15, CFS-T FB 20, CFS-T FB 30
  Selection according diameter of penetration
- Position: inside the rectangular opening(s) of the frame
- Possible additional parts: core module and filler module used for blank seals and for sealing between cables and basic modules
- Number of modules depending on penetrations

Seal insulation:

Cable insulation ($AP_1$):

- Material: stone wool according Annex B, table B.15.1 of the ETA with density of 80 kg/m³ and a thickness of 30 mm
- Position: insulation on the cables, additional to the seal insulation, on both sides of the wall / on lower side of the floor
- Fixed: with steel gauze (thickness 0,7 mm). Insulation lengths of the cables see Annex C of the ETA

Steel sleeve insulation ($AP_3$):

- Material: stone wool according Annex B, table B.15.1 of the ETA with density of 80 kg/m³ and a thickness of 30 mm
- Position: on the steel sleeve on both sides of the wall/ on lower side of the floor
- Fixed: with pins (diameter 4mm), washers and with steel gauze (thickness 0,7 mm)

B.4.2 Seal size

Range: min. Ø 50 mm (CFS-T RR-50) up to max. Ø 205 mm (CFS-T RR-200)

B.4.3 Number of penetrations

Any number of single openings CFS-T RR-50 + CFS-T SLF 50 MSP up to CFS-T RR-200 + CFS-T SLF 200 MSP, details given in Annex C of the ETA.

## B.8 Product: RRS series

### B.8.1 System description

The modular system Type “Hilti Firestop Cable Transit CFS-T RRS” consists of an elastic plug seal, stone wool insulation, elastomeric rubber modules and lubricant.

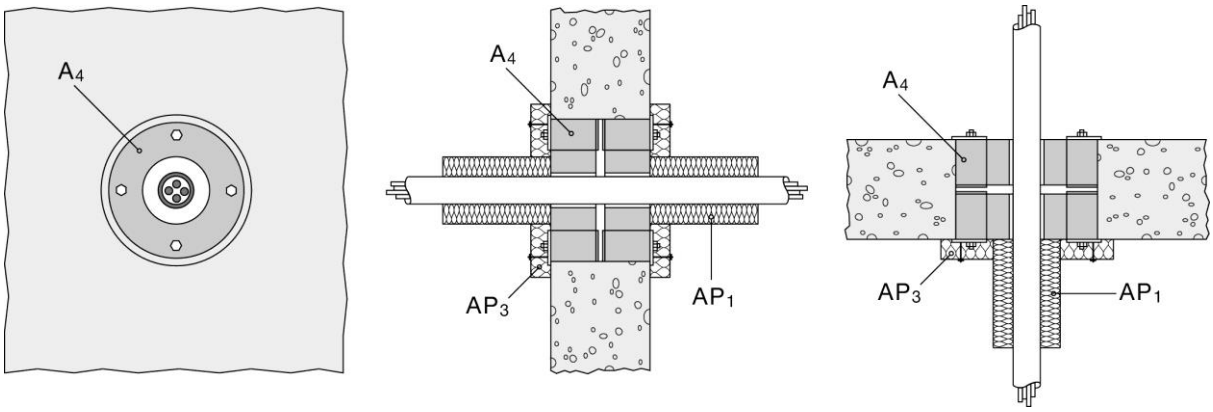


Plug seal ($A_4$):

- Material: flexible, non-flammable, halogen free elastomeric rubber (HFE)
- Max. dimensions: Ø 100 mm (type CFS-T RRS 100)
- Types: Hilti CFS-T RRS-43, CFS-T RRS-50, CFS-T RRS-70, CFS-T RRS-100
  Selection according diameter of penetration
- Position: inside the opening(s) of the wall/floor
- Fixed: clamped inside the wall/floor opening by tightening the bolts of the clamp plates
- Adapter Material: flexible, non-flammable, halogen free elastomeric rubber (HFE). Position: inside the plug seal in order to adjust the cable diameter by using black, grey or red adapter

Seal insulation:

Cable insulation ($AP_1$):

- Material: stone wool according Annex B, table B.15.1 of the ETA with density of 80 kg/m³ and a thickness of 30 mm
- Position: insulation on the cables, additional to the seal insulation, on both sides of the wall / on lower side of the floor
- Fixed: with steel gauze (thickness 0,7 mm). Insulation lengths of the cables see Annex C of the ETA

Plug insulation ($AP_3$):

- Material: stone wool according Annex B, table B.15.1 of the ETA with density of 80 kg/m³ and a thickness of 30 mm
- Position: on the plug on both sides of the wall/ on lower side of the floor
- Fixed: with pins (diameter 4 mm) and washers

### B.8.2 Seal size

Range: min. Ø 43 mm (CFS-T RRS-43) up to max. Ø 103 mm (CFS-T RRS-100)

### B.8.3 Number of penetrations

Any number of single openings Hilti CFS-T RRS-43 up to Hilti CFS-T RRS-100, details given in Annex C of the ETA.

## B.9 Product: RRS series + SLF series

### B.9.1 System description

The modular system Type “Hilti Firestop Cable Transit CFS-T RRS” consists of a flanged steel sleeve installed both sides, an elastic plug seal, stone wool insulation, elastomeric rubber modules and lubricant.

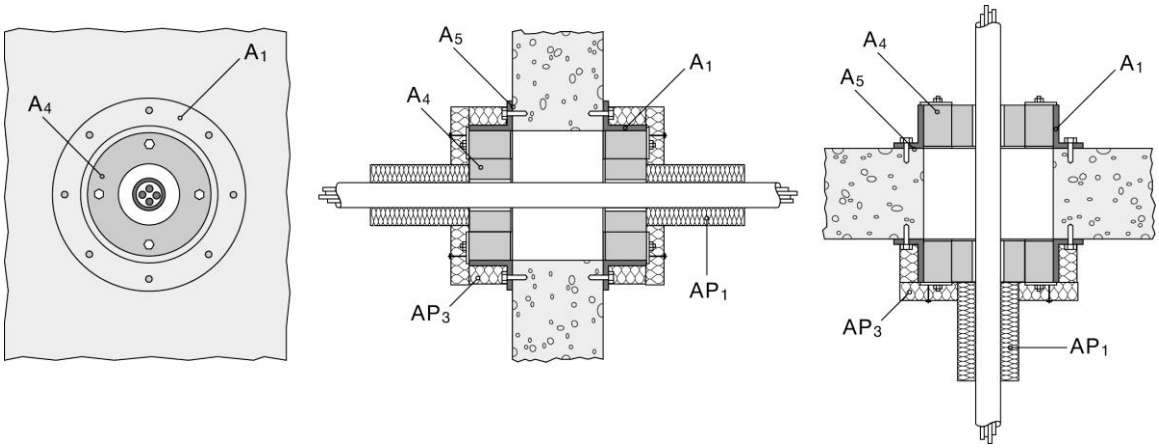


Steel Sleeve ($A_1$):

- Material: mild steel primed (MSP)
- Max. dimensions: Ø 100 mm (type CFS-T SLF 100)
- Types: Hilti CFS-T SLF 50, CFS-T SLF 70, CFS-T SLF 100 MSP (surface mounted)
- Max dimensions: outer diameter 208 mm, height 70 mm, thickness 5 mm and 8 mm (type CFS-T SLF 100 MSP)
- Fixed: with 4 anchor bolts to the wall/floor

Smoke tightness between frame and support construction according Annex B.8 of the ETA.

Plug seal ($A_4$):

- Material: flexible, non-flammable, halogen free elastomeric rubber (HFE)
- Max. dimensions: Ø 100 mm (type CFS-T RRS 100)
- Types: Hilti CFS-T RRS-43, CFS-T RRS-50, CFS-T RRS-70, CFS-T RRS-100
  Selection according diameter of penetration
- Position: inside the steel sleeve of the wall/floor
- Fixed: clamped inside the steel sleeve opening by tightening the bolts of the clamp plates
- Adapter Material: flexible, non-flammable, halogen free elastomeric rubber (HFE). Position: inside the plug seal in order to adjust the cable diameter by using black, grey or red adapter

Seal insulation:

Cable insulation ($AP_1$):

- Material: stone wool according Annex B, table B.15.1 of the ETA with density of 80 kg/m³ and a thickness of 30 mm
- Position: insulation on the cables, additional to the seal insulation, on both sides of the wall/ on lower side of the floor
- Fixed: with steel gauze (thickness 0,7 mm). Insulation lengths of the cables see Annex C of the ETA in order to adjust the cable diameter by using black, grey or red adapter

Steel sleeve insulation ($AP_3$):

- Material: stone wool according Annex B, table B.15.1 of the ETA with density of 80 kg/m³ and a thickness of 30 mm
- Position: on the steel sleeve on both sides of the wall/ on lower side of the floor
- Fixed: with pins (diameter 4 mm), washers and with steel gauze (thickness 0,7 mm)

B.9.2 Seal size

Range: min. Ø 43 mm (CFS-T RRS-43) up to max. Ø 103 mm (CFS-T RRS-100)

B.9.3 Number of penetrations

Any number of single openings Hilti CFS-T RRS-43 up to Hilti CFS-T RRS-100, details given in Annex C of the ETA

## B.10 Product: RR Vario series

B.10.1 System description

The made-to-order system Type “Hilti Firestop Cable Transit CFS-T RR Vario” consists of an elastic plug seal, stone wool cable insulation and lubricant.

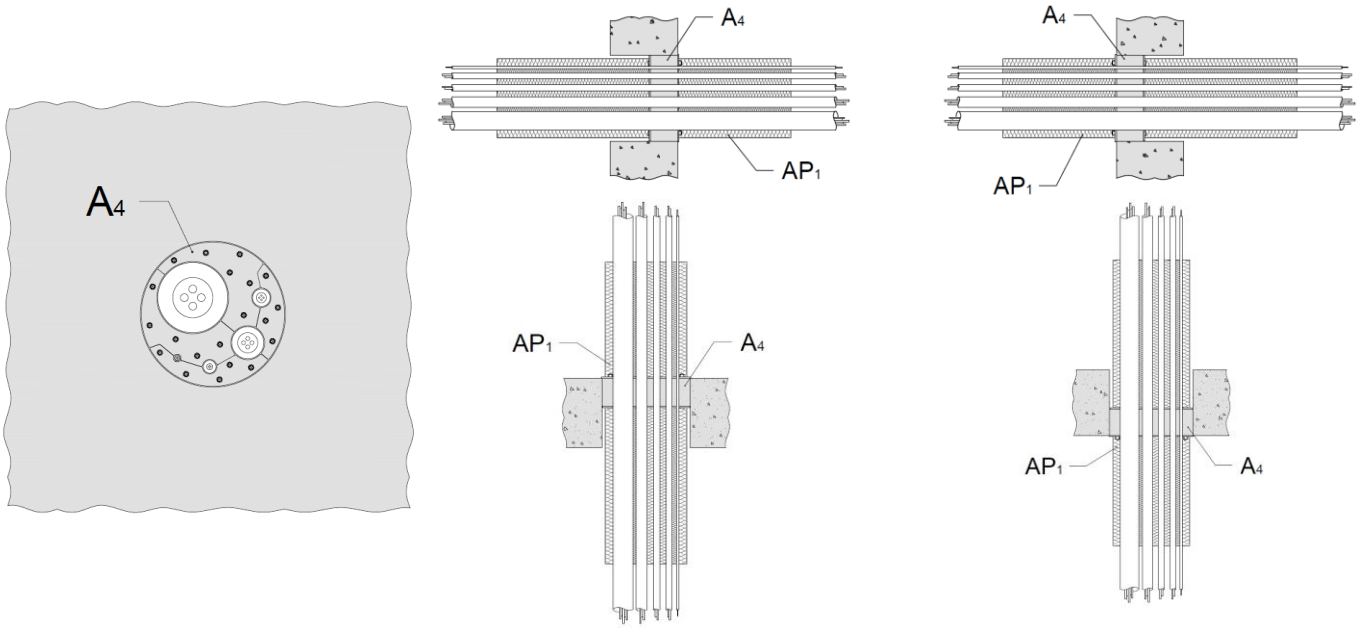


Plug seal ($A_4$):

- Material: flexible, non-flammable, halogen free elastomeric rubber (HFE)
- Max. dimensions: Ø 300 x 60 mm (type CFS-T RR Vario 300)
- Types: Hilti CFS-T RR Vario 60, CFS-T RR Vario 70, CFS-T RR Vario 80, CFS-T RR Vario 100, CFS-T RR Vario 125, CFS-T RR Vario 150, CFS-T RR Vario 200, CFS-T RR Vario 250, CFS-T RR Vario 300
- Position: inside the opening(s) of the wall/floor
- Fixed: clamped inside the wall/floor opening by tightening the bolts of the clamp plates

Seal insulation:

Cable insulation ($AP_1$):

- Material: stone wool according to Annex B, table B.15.1 of the ETA with density of 80 kg/m³ and a thickness of 20 mm
- Position: insulation on the cables on both sides of the wall / floor
- Fixed: with tie wire at least every 200 mm. Insulation lengths of the cables, see Annex C of the ETA

B.10.2 Seal size

Range: min. Ø 61 mm (CFS-T RR Vario 60) up to max. Ø 302 mm (CFS-T RR Vario 300)

B.10.3 Number of penetrations

Min.1 cable and max.5 cable penetrations starting from Hilti CFS-T RR Vario 60 up to Hilti CFS-T RR Vario 300, details given in Annex C of the ETA

## B.11 Product: RR Vario series + SST series

### B.11.1 System description

The made-to-order system Type “Hilti Firestop Cable Transit CFS-T RR Vario” consists of a sealing strip applied on the perimeter of the plug, an elastic plug seal, stone wool cable insulation and lubricant.

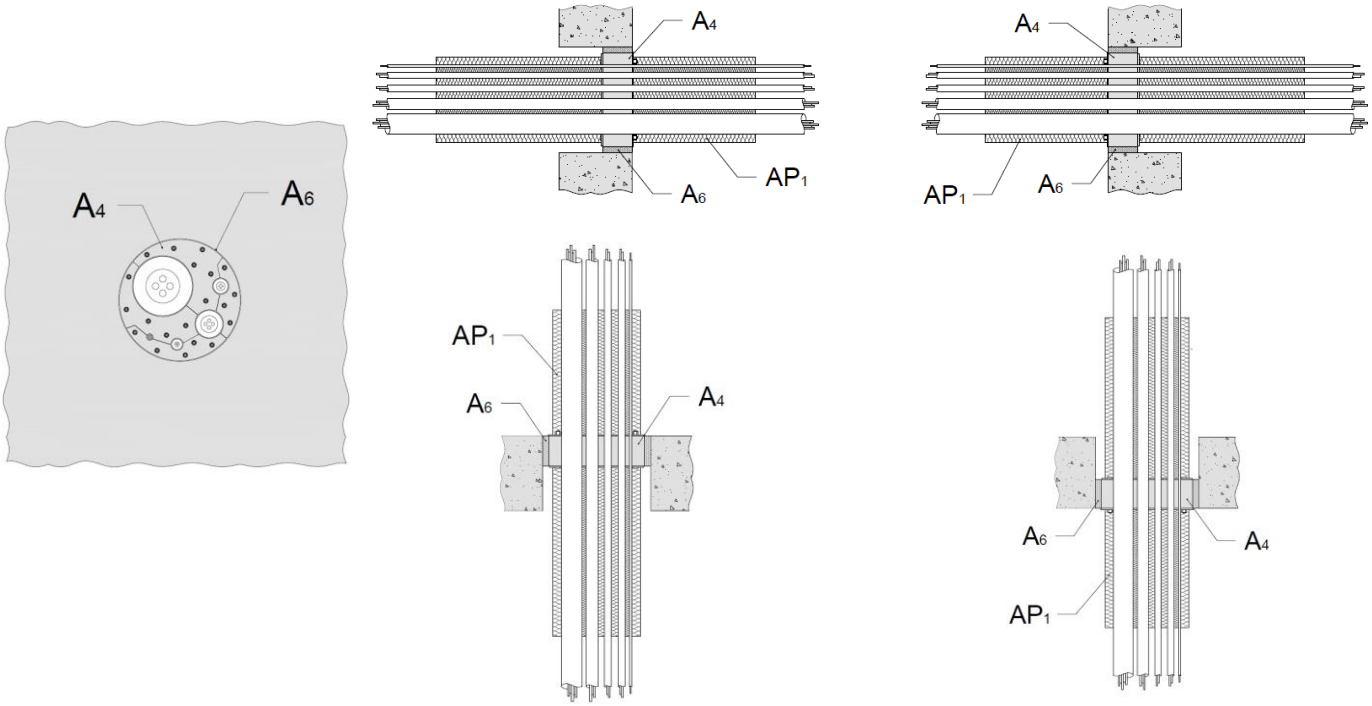


Plug seal ($A_4$):

- Material: flexible, non-flammable, halogen free elastomeric rubber (HFE)
- Max. dimensions: Ø 300 x 60 mm (type CFS-T RR Vario 300)
- Types: Hilti CFS-T RR Vario 60, CFS-T RR Vario 70, CFS-T RR Vario 80, CFS-T RR Vario 100, CFS-T RR Vario 125, CFS-T RR Vario 150, CFS-T RR Vario 200, CFS-T RR Vario 250, CFS-T RR Vario 300
- Position: inside the opening(s) of the wall/floor
- Fixed: clamped inside the wall/floor opening by tightening the bolts of the clamp plates

Sealing strip ($A_6$):

- Material: flexible, non-flammable, halogen free elastomeric rubber (HFE)
- Max. dimensions: 60x4x720 mm
- Types: CFS-T SST 60x1x720, CFS-T SST 60x4x720
- Position: around the perimeter of the plug seal
- Fixed: overlapping layers after one or several full round(s)

Seal insulation:

Cable insulation ($AP_1$):

- Material: stone wool according to Annex B, table B.15.1 of the ETA with density of 80 kg/m³ and a thickness of 20 mm
- Position: insulation on the cables on both sides of the wall / floor
- Fixed: with tie wire at least every 200 mm. Insulation lengths of the cables, see Annex C of the ETA

### B.11.2 Seal size

Range: min. Ø 64 mm (CFS-T RR Vario 60) up to max. Ø 304 mm (CFS-T RR Vario 300)

B.11.3 Number of penetrations

Min.1 cable and max.5 cable penetrations starting from Hilti CFS-T RR Vario 60 up to Hilti CFS-T RR Vario 300, details given in Annex C of the ETA.

## B.12 Product: RR Vario (H) series

B.12.1 System description

The made-to-order system Type “Hilti Firestop Cable Transit CFS-T RR Vario (H)” consists of an elastic plug seal, stone wool cable insulation and lubricant.

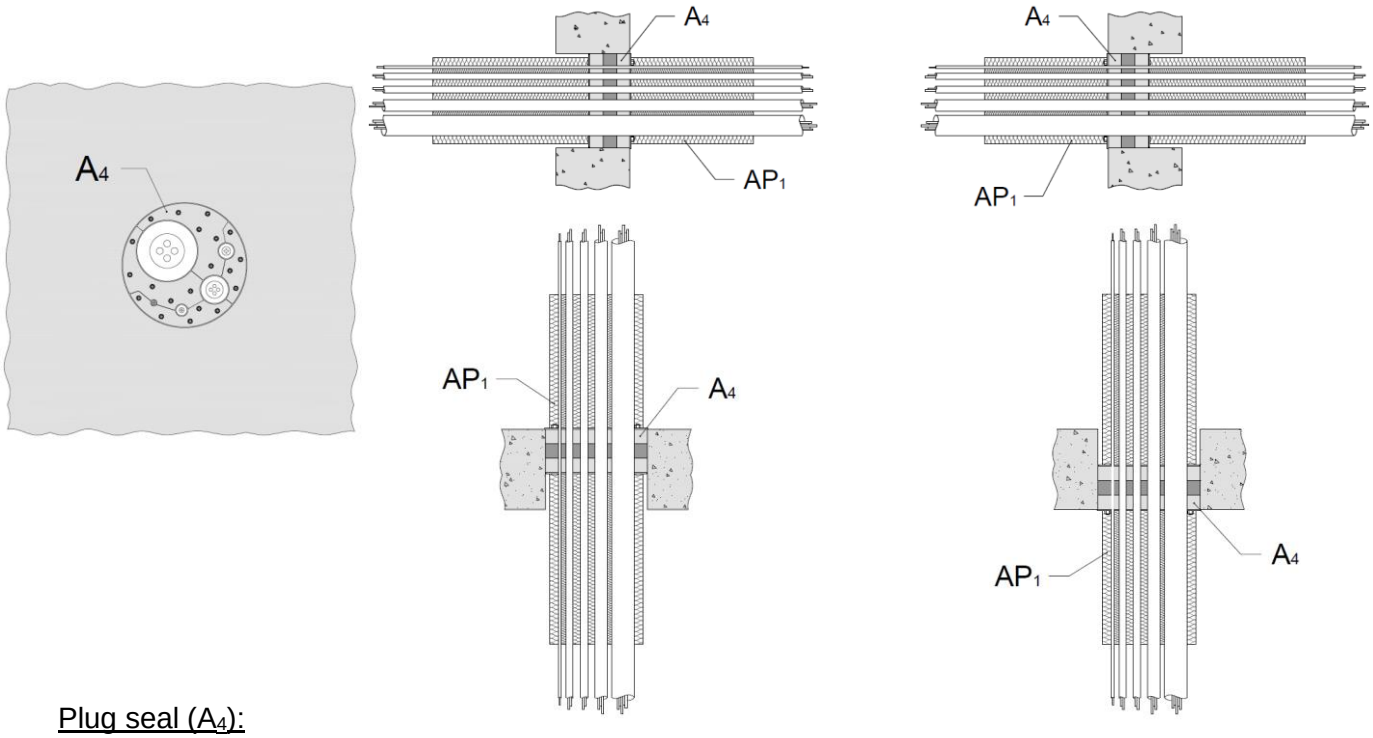


Plug seal ($A_4$):

- Material: flexible, non-flammable, halogen free elastomeric rubber (HFE)
- Max. dimensions: Ø 300 x 90 mm (type CFS-T RR Vario (H) 300)
- Types: Hilti CFS-T RR Vario (H) 60, CFS-T RR Vario (H) 70, CFS-T RR Vario (H) 80, CFS-T RR Vario (H) 100, CFS-T RR Vario (H) 125, CFS-T RR Vario (H) 150, CFS-T RR Vario (H) 200, CFS-T RR Vario (H) 250, CFS-T RR Vario (H) 300
- Position: inside the opening(s) of the wall/floor
- Fixed: clamped inside the wall/floor opening by tightening the bolts of the clamp plates

Seal insulation:

Cable insulation ($AP_1$):

- Material: stone wool according to Annex B, table B.15.1 of the ETA with density of 80 kg/m³ and a thickness of 20 mm
- Position: insulation on the cables on both sides of the wall / floor
- Fixed: with tie wire at least every 200 mm. Insulation lengths of the cables, see Annex C of the ETA

B.12.2 Seal size

Range: min. Ø 61 mm (CFS-T RR Vario (H) 60) up to max. Ø 302 mm (CFS-T RR Vario (H) 300)

B.12.3 Number of penetrations

Min.1 cable and max.5 cable penetrations starting from Hilti CFS-T RR Vario (H) 60 up to Hilti CFS-T RR Vario (H) 300, details given in Annex C of the ETA.

## B.13 Product: RR3 series

B.13.1 System description

The adapter based modular system Type “Hilti Firestop Cable Transit CFS-T RR3” consists of an elastic plug seal, stone wool cable insulation, elastomeric rubber adapters and lubricant.

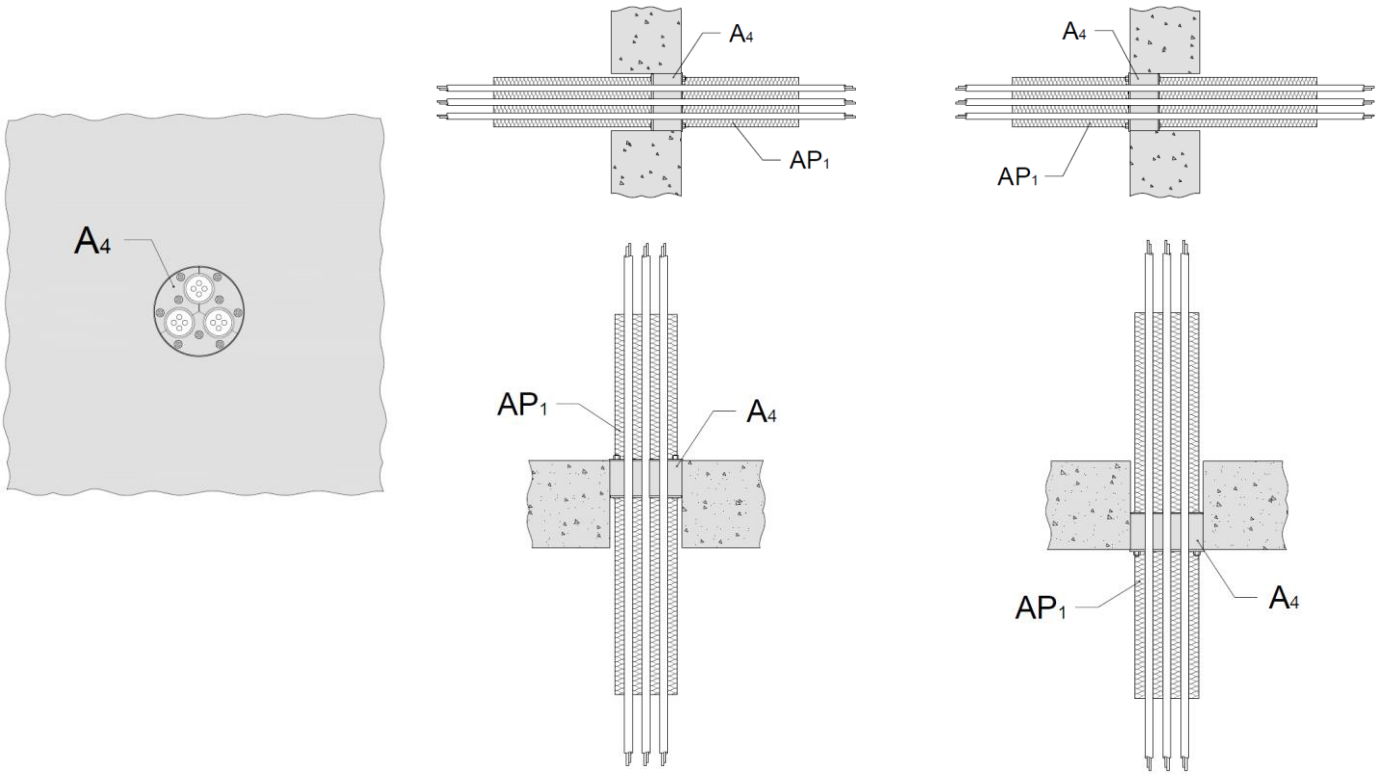


Plug seal ($A_4$):

- Material: flexible, non-flammable, halogen free elastomeric rubber (HFE)
- Max. dimensions: Ø 200 x 60 mm (type CFS-T RR3 200)
- Types: Hilti CFS-T RR3 150, CFS-T RR3 200
- Position: inside the opening(s) of the wall/floor
- Fixed: clamped inside the wall/floor opening by tightening the bolts of the clamp plates

Seal insulation:

Cable insulation ($AP_1$):

- Material: stone wool according to Annex B, table B.15.1 of the ETA with density of 80 kg/m³ and a thickness of 20 mm
- Position: insulation on the cables on both sides of the wall / floor
- Fixed: with tie wire at least every 200 mm. Insulation lengths of the cables, see Annex C of the ETA

B.13.2 Seal size

Range: min. Ø 151 mm (CFS-T RR3 150), max. Ø 202 mm (CFS-T RR3 200)

B.13.3 Number of penetrations

Three cable penetrations for each sizes Hilti CFS-T RR3 150 and Hilti CFS-T RR3 200, details given in Annex C of the ETA.

## B.14 Product: RR3 series + SLF series

B.14.1 System description

The adapter based modular system Type “Hilti Firestop Cable Transit CFS-T RR3” consists of a flanged steel sleeve, an elastic plug seal, stone wool cable insulation, elastomeric rubber adapters and lubricant.

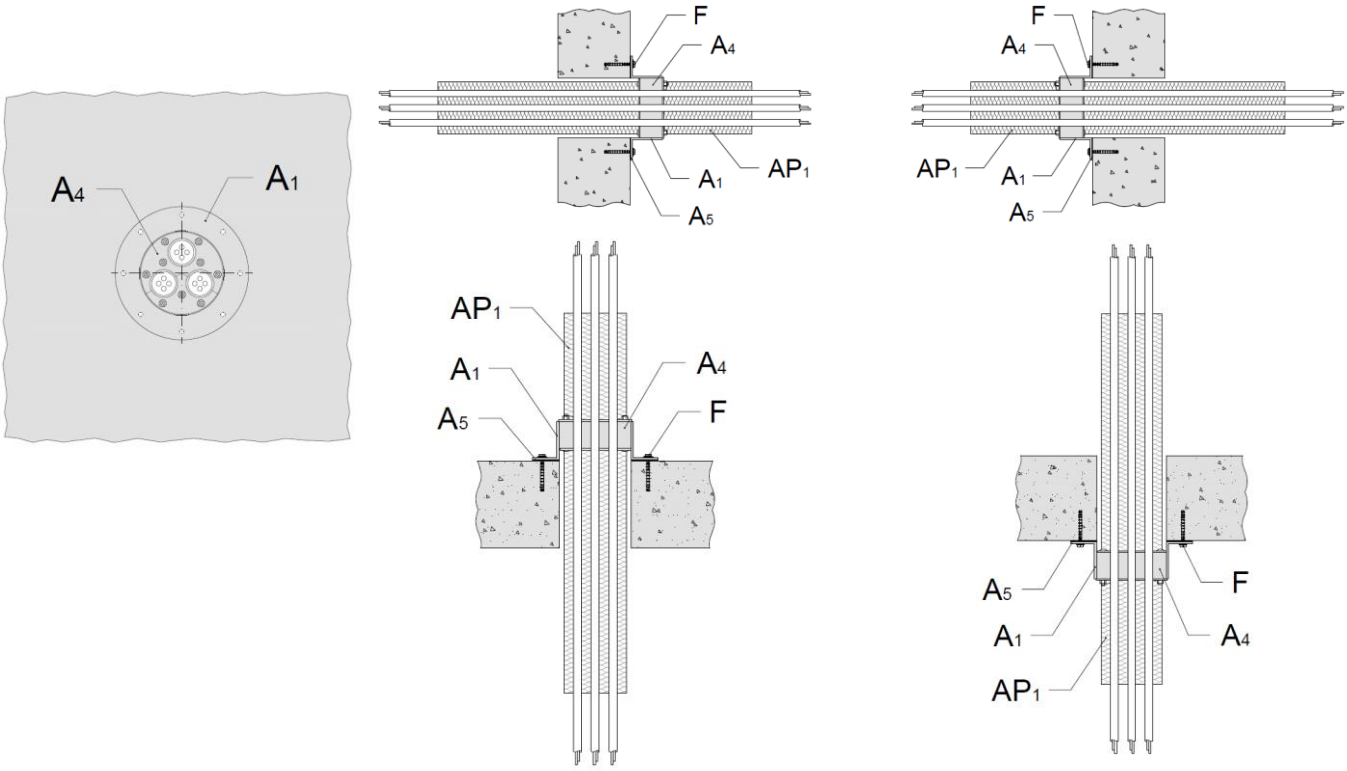


Steel Sleeve ($A_1$):

- Material: mild steel primed (MSP)
- Max. dimensions: Ø 200 mm (type CFS-T SLF 200 MSP, outer diameter 320 mm, height 70 mm, thickness 5 mm and 8 mm)
- Types: Hilti CFS-T SLF 150, CFS-T SLF 200 MSP (surface mounted)
- Fixed (F): with Hilti HUS3-H screw anchor and washer to the wall/floor, 6 pieces for SLF 150 and 8 pieces for SLF 200

Smoke tightness between sleeve and support construction according Annex B.16 of the ETA.

Plug seal ($A_4$):

- Material: flexible, non-flammable, halogen free elastomeric rubber (HFE)
- Max. dimensions: Ø 200 x 60 mm (type CFS-T RR3 200)
- Types: Hilti CFS-T RR3 150, CFS-T RR3 200
- Position: inside the steel sleeve of the wall/floor
- Fixed: clamped inside the steel sleeve opening by tightening the bolts of the clamp plates

Seal insulation:
Cable insulation ($AP_1$):

- Material: stone wool according to Annex B, table B.15.1 of the ETA with density of 80 kg/m³ and a thickness of 20 mm
- Position: insulation on the cables on both sides of the wall / floor
- Fixed: with tie wire at least every 200 mm. Insulation lengths of the cables, see Annex C of the ETA

B.14.2 Seal size

Range: min. Ø 151 mm (CFS-T RR3 150), max. Ø 202 mm (CFS-T RR3 200)

B.14.3 Number of penetrations

Three cable penetrations for each sizes Hilti CFS-T RR3 150 and Hilti CFS-T RR3 200, details given in Annex C of the ETA.

## B.15 Insulation material

### B.15.1 Mineral wool products for additional cable, plug and metal frame protection

Table B.15.1: Specification for mineral wool products suitable for being used as additional protection for cables, plugs and metal frames (relevant for Annex B.1 to B.14 of ETA)

| Characteristic | Specification | Unit |
|---|---|---|
| Stone wool according to EN 14303 | | |
| Reaction to fire class according to EN 13501-1 | A1 | - |
| Thermal conductivity at 20°C | ≤ 0.040 | W/(mK) |
| Density | ≤ 80 | kg/m$^3$ |

The following list contains suitable products but may not be exhaustive:

| Manufacturer | Product designation |
|---|---|
| Isover | MD 100 |
| Isover | MD 2 |
| Isover | ULTIMATE TECH WIRED MAT 5.0 N |
| Isover | Protect |
| Rockwool | ProRox WM 80 |
| Rockwool | RTD Plus |
| Rockwool | Klimarock |

### B.15.2 Mineral wool products for additional pipe protection

Table B.15.2: Specification for mineral wool products suitable for being used as pipe insulation (relevant for Annex B.1 to B.6 of the ETA)

| Interrupted insulation |
|---|
| Stone wool according to EN 14303, class A2 or A1 according to EN 13501-2, Al-faced |

| Additional insulation | |
|---|---|
| **Manufacturer** | **Product designation** |
| Isover | Coquilla AT-LR |
| Isover | Protect BSR 90 alu |
| Paroc | Section AluCoat T |
| Rockwool | Conlit Pipe sections |
| Rockwool | Klimarock |
| Rockwool | RS 800 pipe sections |

## B.16 Smoke tightness

Ancillary products “Hilti Firestop Acrylic Sealant CFS-S ACR” ($A_5$) for smoke tightness:

A detailed specification of the product “Hilti Firestop Acrylic Sealant CFS-S ACR” is contained in document “Identification / Product Specification relating to the European Technical Assessment ETA-10/0292 and ETA-10/0389 - Hilti Firestop Acrylic Sealant CFS-S ACR” which is a non-public part of the referenced ETAs.

The Control Plan is defined in document "Control Plan relating to the European Technical Assessment ETA-10/0292 and ETA-10/0389 - Hilti Firestop Acrylic Sealant CFS-S ACR” which is a non-public part of the referenced ETAs.

## ANNEX C - RESISTANCE TO FIRE CLASSIFICATION OF PENETRATION SEALS MADE OF "HILTI FIRESTOP CABLE TRANSIT CFS-T"

### C.1 General Information

The penetration seals may only be penetrated by the services described in Annex C.2 and C.4 of the ETA. Other parts or support constructions must not penetrate the penetration seal.

The service support construction must be fixed to the building element containing the penetration seal or a suitable adjacent building element, on both sides of the penetration in such a manner that in the case of fire, no additional load is imposed on the seal. Furthermore it is assumed that this support is maintained on the unexposed side, for the required period of fire resistance.

**The classifications relate to C/U (capped inside the furnace/uncapped outside) for metal pipes. For further information refer to national regulations.**

#### C.1.1 Wall/floor constructions

a) Rigid walls: The wall must have a minimum thickness of 150 / 200 mm and comprise concrete, with a minimum density of 450 / 2200 kg/m$^3$ (see clause 2.1 of the ETA).

b) Rigid floors: The floor must have a minimum thickness of 150 / 200 mm and comprise concrete with a minimum density of 650 / 2200 kg/m$^3$ (see clause 2.1 of the ETA).

The walls / floors must be classified in accordance with EN 13501-2 for the required fire resistance period or fulfil the requirements of the relevant Eurocode. This ETA does not cover use of the product as a penetration seal in sandwich panel constructions.

## C.2 Penetration seal system Hilti CFS-T SB and CFS-T SBO in rigid walls and floors

according to Annex C.1.1 of the ETA

Maximum distance for first service support: 420 mm.
Maximum seal size: 504 x 562 mm (width x height).
Minimum distances in mm cable and metal pipe penetration seal:

| | | |
|---|---|---|
| $s_1$ = | 5 | (distance between cables and the side seal edge) |
| $s_3$ = | 5 | (distance between cables and upper seal edge) |
| $s_6$ = | 0 | (distance between the insulation of metal pipes and the seal edge) |
| $s_8$ = | 0 | (distance between the insulation of metal pipes) |
| $s_{13}$ = | 90 | (distance between cables and metal pipes) |

The results are also valid for mixed penetration seals

Minimum distances in mm (see illustration of distances below):

SB

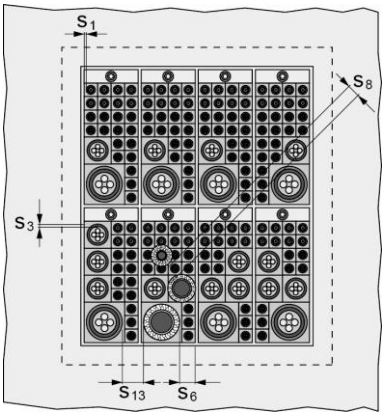


SBO

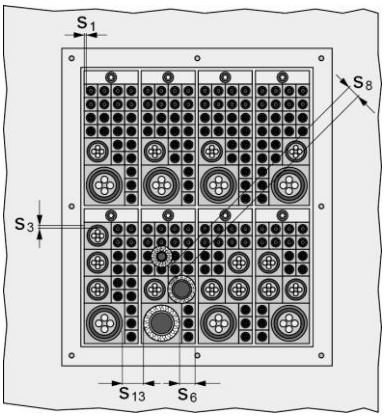


### C.2.1 Rigid Walls according to Annex C.1.1 of the ETA – minimum wall thickness 150 mm

| C.2.1.1 Blank seal (no services) - System: CFS-T SB | **Classification** |
|---|---|
| - Single frame<br>Maximum seal size: 277 mm x 120 mm (CFS-T SB 8x1),<br>Construction details (for symbols and abbreviations see Annex A of the ETA):<br> 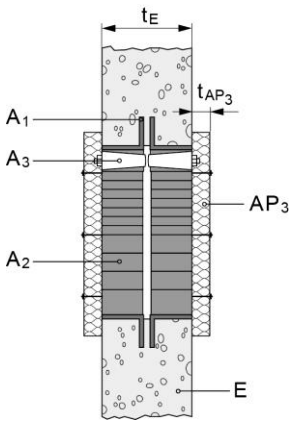 <br> | EI 180 |

| | |
|---|---|
| - Multiple frame<br>Maximum seal size: 504 mm x 562 mm (CFS-T SB 8+8x4),<br>Construction details (for symbols and abbreviations see Annex A of the ETA):<br> 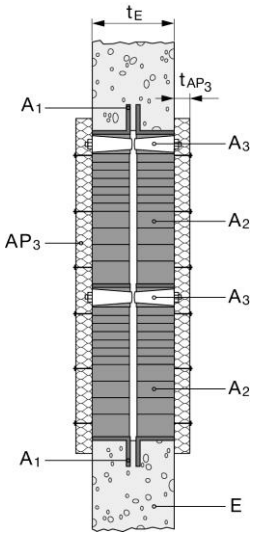 <br> | EI 180 |

| C.2.1.2 Cable penetration - System: CFS-T SB | | | |
|---|---|---|---|
| Maximum seal size: 504mm x 562mm (CFS-T SB 8+8x4)<br>Construction details (for symbols and abbreviations see Annex A):<br> 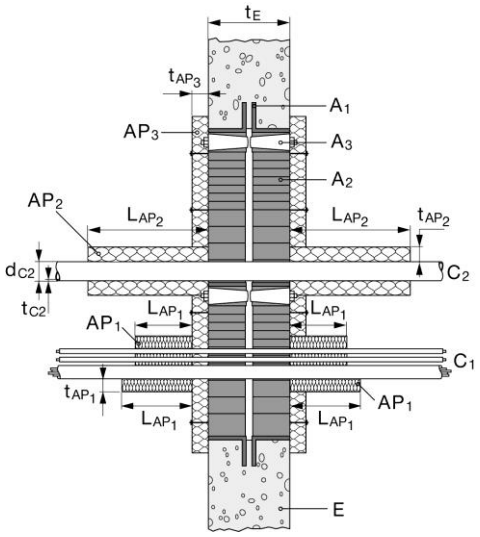 <br> | | | |
| Cable diameter $C_1$ (mm) | Cable insulation thickness $t_{AP1}$ (mm) | Cable insulation length $L_{AP1}$ (mm) | **Classification** |
| All sheathed cable types currently and commonly used in building practice in Europe (e.g. power, control, signal, telecommunication, data, optical fibre cables, except waveguide and non-sheathed cables) with a diameter of: | | | |
| Small cable group max. Ø21mm | 30 | 250 | EI 180 |
| Medium cable group max. Ø50mm | 30 | 250 | EI 180 |
| Large cable group max. Ø80mm | 30 | 250 | EI 120 / E 180 |

| C.2.1.3 Non-combustible pipe penetration - System: CFS-T SB | | | | | |
|---|---|---|---|---|---|
| Maximum seal size: 504mm x 562mm (CFS-T SB 8+8x4) | | | | | |
| Pipe diameter $d_{C2}$ (mm) | Pipe wall thickness $t_{C2}$ (mm) | Thickness of pipe insulation $t_{AP2}$ (mm) | Length of pipe insulation $L_{AP2}$ (mm) | Arrangement pipe insulation | **Classification** |
| 15 | 1 – 14,2 | ≥ 30 | ≥ 500 | LI | EI 180 |
| 15 – 28 | 1 – 14,2 | ≥ 30 | ≥ 500 | LI | EI 120-C/U, E 180-C/U |
| 28 – 54 | 1/1,5 – 14,2 | ≥ 30 | ≥ 500 | LI | |
| 15 – 28 | 1 – 14,2 | ≥ 30 | - | CI | EI 180 |
| 28 – 54 | 1/1,5 – 14,2 | ≥ 30 | - | CI | EI 180 |

| **C.2.2 Rigid Floors according to Annex C.1.1 of the ETA – minimum floor thickness 200 mm** | |
|---|---|
| C.2.2.1 Blank seal (no services) - System: CFS-T SB | **Classification** |
| - Single frame<br>Maximum seal size: 277mm x 120mm (CFS-T SB 8x1),<br>Construction details (for symbols and abbreviations see Annex A of the ETA):<br> 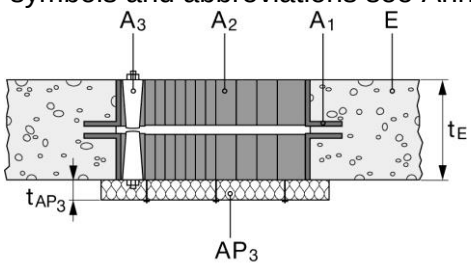 <br> | EI 180 |
| - Multiple frame<br>Maximum seal size: 504mm x 562mm (CFS-T SB 8+8x4),<br>Construction details (for symbols and abbreviations see Annex A of the ETA):<br> 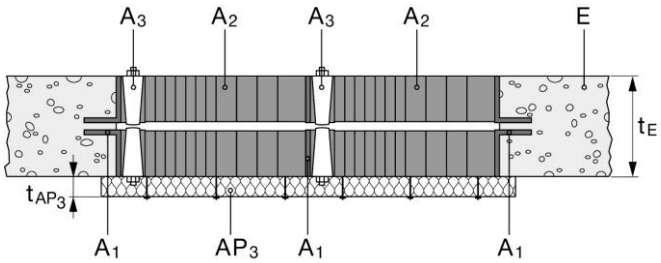 <br> | EI 180 |

C.2.2.2 Cable penetration - System: CFS-T SB

Maximum seal size: 504mm x 562mm (CFS-T SB 8+8x4)

Construction details (for symbols and abbreviations see Annex A of the ETA):

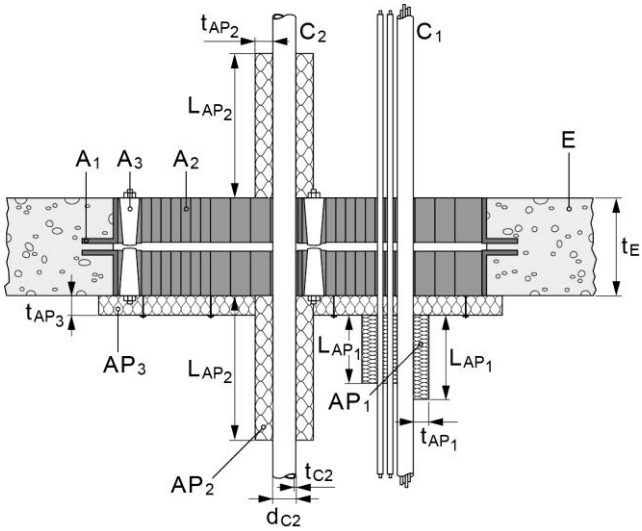


| Cable diameter $C_1$ (mm) | Cable insulation thickness $t_{AP1}$ (mm) | Cable insulation length $L_{AP1}$ (mm) | **Classification** |
|---|---|---|---|
| All sheathed cable types currently and commonly used in building practice in Europe (e.g. power, control, signal, telecommunication, data, optical fibre cables, except waveguide and non-sheathed cables with a diameter of: | | | |
| Small cable group max. Ø 21 mm | 30 | 300 | EI 180 |
| Medium cable group max. Ø 50 mm | 30 | 300 | EI 180 |
| Large cable group max. Ø 80 mm | 30 | 300 | EI 120 / E 180 |

C.2.2.3 Non-combustible pipe penetration - System: CFS-T SB

Maximum seal size: 504 mm x 562 mm (CFS-T SB 8+8x4)

| Pipe diameter $d_{C2}$ (mm) | Pipe wall thickness $t_{C2}$ (mm) | Thickness of pipe insulation $t_{AP2}$ (mm) | Length of pipe insulation $L_{AP2}$ (mm) | Arrangement pipe insulation | **Classification** |
|---|---|---|---|---|---|
| 15 - 28 | 1 – 14,2 | ≥ 30 | ≥ 400 | LI | EI 120-C/U, E 180-C/U |
| 28 – 54 | 1/1,5 – 14,2 | ≥ 30 | ≥ 500 | LI | |
| 15 – 28 | 1 – 14,2 | ≥ 30 | - | CI | EI 180 |
| 28 – 54 | 1/1,5 – 14,2 | ≥ 30 | - | CI | EI 180 |

| **C.2.3 Rigid Walls according to Annex C.1.1 of the ETA – minimum wall thickness 150 mm** | |
|---|---|
| C.2.3.1 Blank seal (no services) - System: CFS-T SBO | **Classification** |
| - Single frame<br>Maximum seal size: 120 mm x 277 mm (CFS-T SBO 8x1),<br>Construction details (for symbols and abbreviations see Annex A of the ETA):<br> 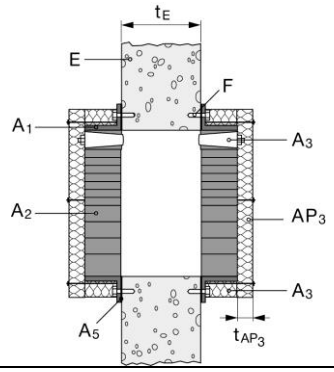 <br> | EI 180 |
| - Multiple frame<br>Maximum seal size: 504 mm x 562 mm (CFS-T SBO 8+8x4),<br>Construction details (for symbols and abbreviations see Annex A of the ETA):<br> 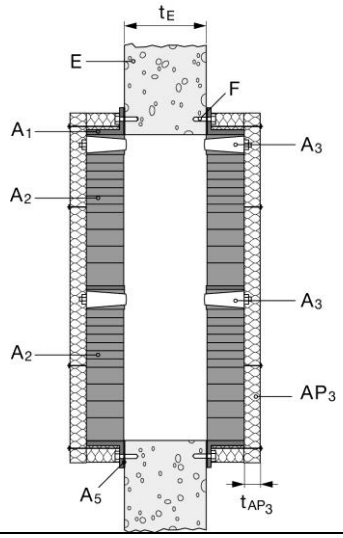 <br> | EI 180 |

| C.2.3.2 Cable penetration - System: CFS-T SBO |
|---|
| Maximum seal size: 504 mm x 562 mm (CFS-T SBO 8+8x4)<br>Construction details (for symbols and abbreviations see Annex A of the ETA):<br> 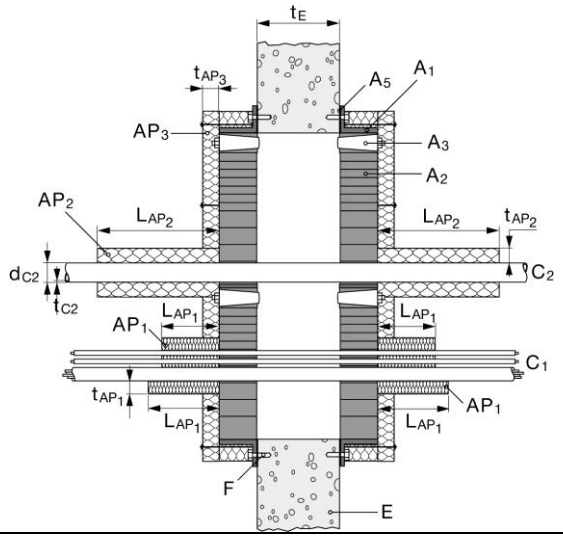 <br> |

| Cable diameter $C_1$ (mm) | Cable insulation thickness $t_{AP1}$ (mm) | Cable insulation length $L_{AP1}$ (mm) | **Classification** |
|---|---|---|---|
| All sheathed cable types currently and commonly used in building practice in Europe (e.g. power, control, signal, telecommunication, data, optical fibre cables, except waveguide and non-sheathed cables with a diameter of: | | | |
| Small cable group max. Ø 21 mm | 30 | 150 | EI 180 |
| Medium cable group max. Ø 50 mm | 30 | 150 | EI 180 |
| Large cable group max. Ø 80 mm | 30 | 150 | EI 120 / E 180 |

| C.2.3.3 Non-combustible pipe penetration - System: CFS-T SBO | | | | | |
|---|---|---|---|---|---|
| Maximum seal size: 504mm x 562mm (CFS-T SB 8+8x4) | | | | | |
| Pipe diameter $d_{C2}$ (mm) | Pipe wall thickness $t_{C2}$ (mm) | Thickness of pipe insulation $t_{AP2}$ (mm) | Length of pipe insulation $L_{AP2}$ (mm) | Arrangement pipe insulation | **Classification** |
| 15 | 1 – 14,2 | ≥ 30 | ≥ 250 | LI | EI 180 |
| 15 – 28 | 1 – 14,2 | ≥ 30 | ≥ 250 | LI | EI 120-C/U, E 180-C/U |
| 28 –54 | 1/1,5 – 14,2 | ≥ 30 | ≥ 500 | LI | |
| 15 –28 | 1 – 14,2 | ≥ 30 | - | CI | EI 180 |
| 28 –54 | 1/1,5 – 14,2 | ≥ 30 | - | CI | EI 180 |

| **C.2.4 Rigid Floors according to Annex C.1.1 of the ETA – minimum floor thickness 200 mm** | |
|---|---|
| C.2.4.1 Blank seal (no services) - System: CFS-T SBO | **Classification** |
| - Single frame<br>Maximum seal size: 277 mm x 120 mm (CFS-T SBO 8x1),<br>Construction details (for symbols and abbreviations see Annex A of the ETA):<br> 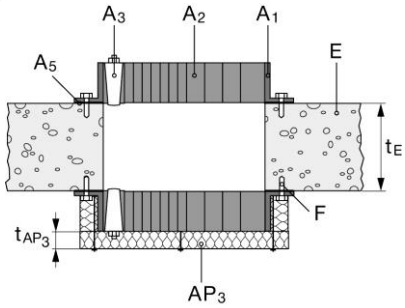 <br> | EI 180 |
| - Multiple frame<br>Maximum seal size: 520 mm x 580 mm (CFS-T SBO 8+8x4),<br>Construction details (for symbols and abbreviations see Annex A of the ETA):<br> 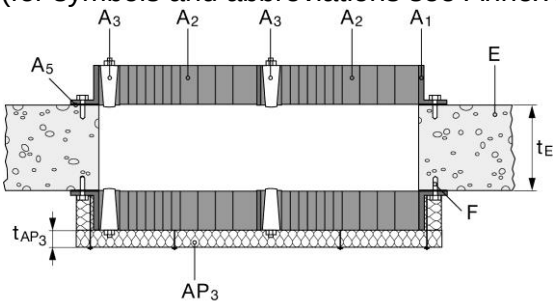 <br> | EI 180 |

C.2.4.2 Cable penetration - System: CFS-T SBO

Maximum seal size: 504mm x 562mm (CFS-T SBO 8+8x4)

Construction details (for symbols and abbreviations see Annex A of the ETA):

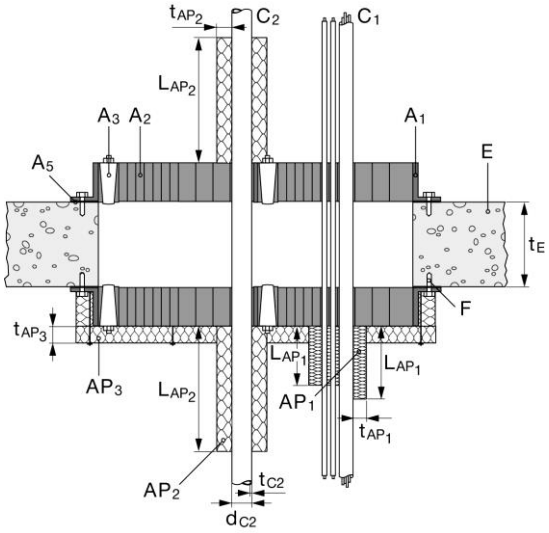


| Cable diameter $C_1$ (mm) | Cable insulation thickness $t_{AP1}$ (mm) | Cable insulation length $L_{AP1}$ (mm) | **Classification** |
|---|---|---|---|
| All sheathed cable types currently and commonly used in building practice in Europe (e.g. power, control, signal, telecommunication, data, optical fibre cables, except waveguide and non-sheathed cables with a diameter of: | | | |
| Small cable group max. Ø 21 mm | 30 | 250 | EI 180 |
| Medium cable group max. Ø 50 mm | 30 | 250 | EI 180 |
| Large cable group max. Ø 80 mm | 30 | 250 | EI 180 |

C.2.4.3 Non-combustible pipe penetration - System: CFS-T SBO

Maximum seal size: 520 mm x 580 mm (CFS-T SB 8+8x4)

| Pipe diameter $d_{C2}$ (mm) | Pipe wall thickness $t_{C2}$ (mm) | Thickness of pipe insulation $t_{AP2}$ (mm) | Length of pipe insulation $L_{AP2}$ (mm) | Arrangement pipe insulation | **Classification** |
|---|---|---|---|---|---|
| 15 – 28 | 1 – 14,2 | ≥ 30 | ≥ 300 | LI | EI 120-C/U, E 180-C/U |
| 28 – 54 | 1/1,5 – 14,2 | ≥ 30 | ≥ 500 | LI | |
| 15 – 28 | 1 – 14,2 | ≥ 30 | - | CI | EI 180 |
| 28 – 54 | 1/1,5 – 14,2 | ≥ 30 | - | CI | EI 180 |

## C.3 Penetration seal system Hilti CFS-T SBF in rigid walls and floors

according to Annex C.1.1 of the ETA

Maximum distance for first service support: 420 mm.
Maximum seal size: 504 x 562 mm (width x height).
Minimum distances in mm cable and metal pipe penetration seal:

| | | |
|---|---|---|
| $s_1$ = | 5 | (distance between cables and the side seal edge) |
| $s_3$ = | 5 | (distance between cables and upper seal edge) |
| $s_6$ = | 0 | (distance between the insulation of metal pipes and the seal edge) |
| $s_8$ = | 0 | (distance between the insulation of metal pipes) |
| $s_{13}$ = | 90 | (distance between cables and metal pipes) |

The results are also valid for mixed penetration seals

Minimum distances in mm (see illustration of distances below):

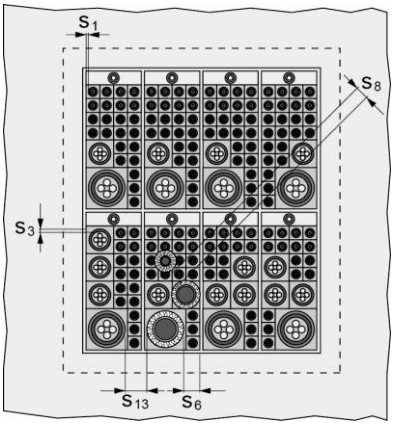


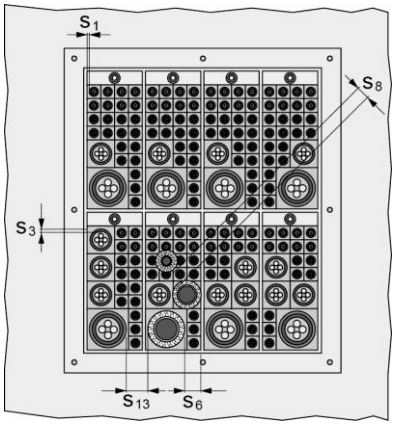


### C.3.1 Rigid Walls according to Annex C.1.1 of the ETA – minimum wall thickness 150 mm

| C.3.1.1 Blank seal (no services) - System: CFS-T SBF | **Classification** |
|---|---|
| - Single frame<br>Maximum seal size: 277 mm x 120 mm (CFS-T SBF 8x1),<br>Construction details (for symbols and abbreviations see Annex A of the ETA):<br> 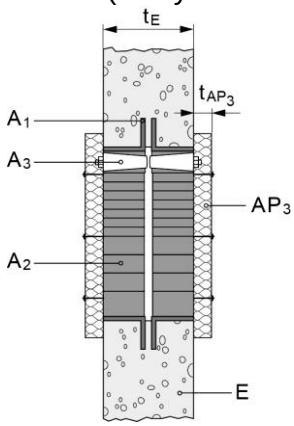 <br> 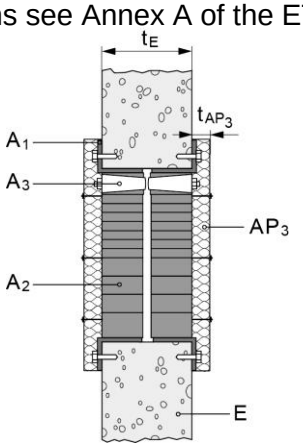 | EI 180 |

| | |
|---|---|
| - Multiple frame<br>Maximum seal size: 504 mm x 562 mm (CFS-T SBF 8+8x4),<br>Construction details (for symbols and abbreviations see Annex A of the ETA):<br> 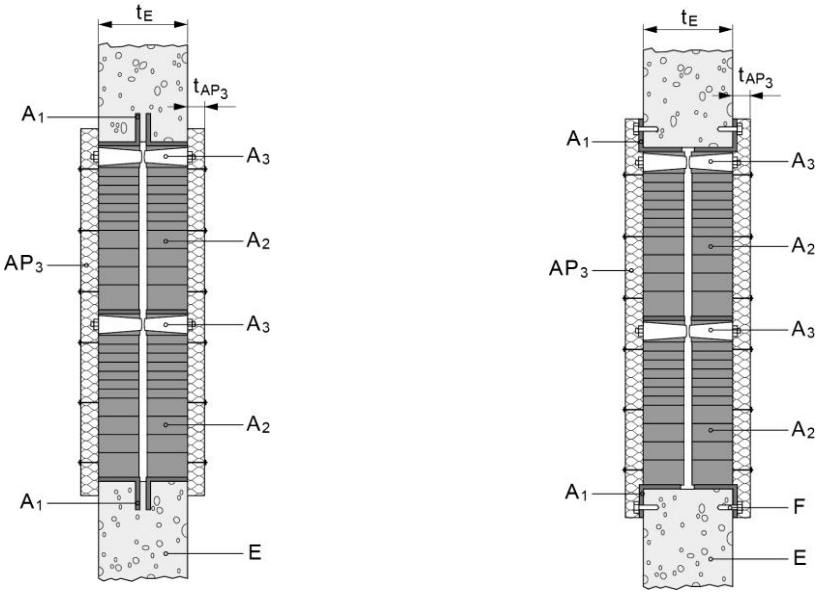 <br> | EI 180 |

C.3.1.2 Cable penetration - System: CFS-T SBF

Maximum seal size: 504mm x 562mm (CFS-T SBF 8+8x4)

Construction details (for symbols and abbreviations see Annex A):

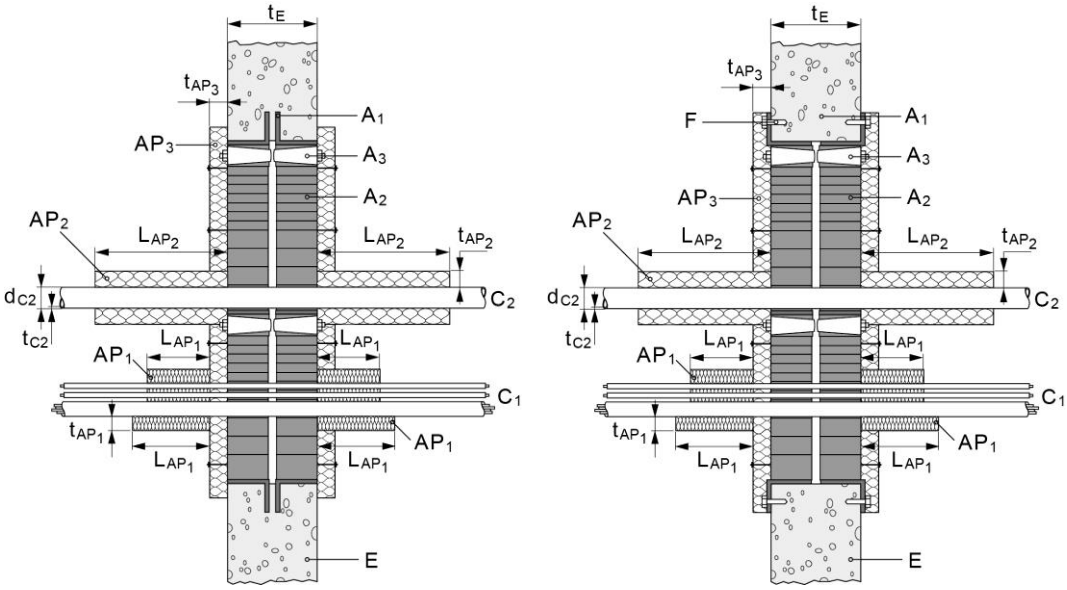


| Cable diameter $C_1$ (mm) | Cable insulation thickness $t_{AP1}$ (mm) | Cable insulation length $L_{AP1}$ (mm) | **Classification** |
|---|---|---|---|
| All sheathed cable types currently and commonly used in building practice in Europe (e.g. power, control, signal, telecommunication, data, optical fibre cables, except waveguide and non-sheathed cables) with a diameter of: | | | |
| Small cable group max. Ø21mm | 30 | 250 | EI 180 |
| Medium cable group max. Ø50mm | 30 | 250 | EI 180 |
| Large cable group max. Ø80mm | 30 | 250 | EI 120 / E 180 |

| C.3.1.3 Non-combustible pipe penetration - System: CFS-T SBF | | | | | |
|---|---|---|---|---|---|
| Maximum seal size: 504mm x 562mm (CFS-T SBF 8+8x4) | | | | | |
| Pipe diameter $d_{C2}$ (mm) | Pipe wall thickness $t_{C2}$ (mm) | Thickness of pipe insulation $t_{AP2}$ (mm) | Length of pipe insulation $L_{AP2}$ (mm) | Arrangement pipe insulation | **Classification** |
| 15 | 1 – 14,2 | ≥ 30 | ≥ 500 | LI | EI 180 |
| 15 – 28 | 1 – 14,2 | ≥ 30 | ≥ 500 | LI | EI 120-C/U, E 180-C/U |
| 28 – 54 | 1/1,5 – 14,2 | ≥ 30 | ≥ 500 | LI | |
| 15 – 28 | 1 – 14,2 | ≥ 30 | - | CI | EI 180 |
| 28 – 54 | 1/1,5 – 14,2 | ≥ 30 | - | CI | EI 180 |

| **C.3.2 Rigid Floors according to Annex C.1.1 of the ETA – minimum floor thickness 200 mm** | |
|---|---|
| C.3.2.1 Blank seal (no services) - System: CFS-T SBF | **Classification** |
| - Single frame<br>Maximum seal size: 277mm x 120mm (CFS-T SBF 8x1),<br>Construction details (for symbols and abbreviations see Annex A of the ETA):<br> 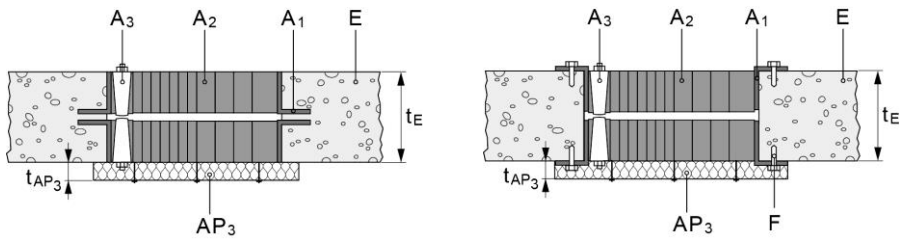 <br> | EI 180 |
| - Multiple frame<br>Maximum seal size: 504mm x 562mm (CFS-T SBF 8+8x4),<br>Construction details (for symbols and abbreviations see Annex A of the ETA):<br> 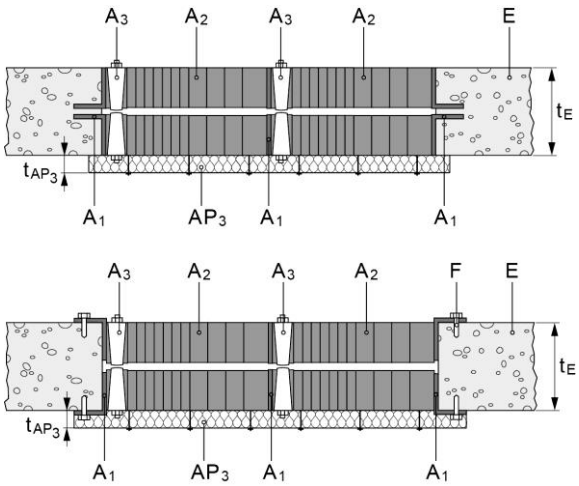 <br> | EI 180 |

C.3.2.2 Cable penetration - System: CFS-T SBF

Maximum seal size: 504mm x 562mm (CFS-T SBF 8+8x4)

Construction details (for symbols and abbreviations see Annex A of the ETA):

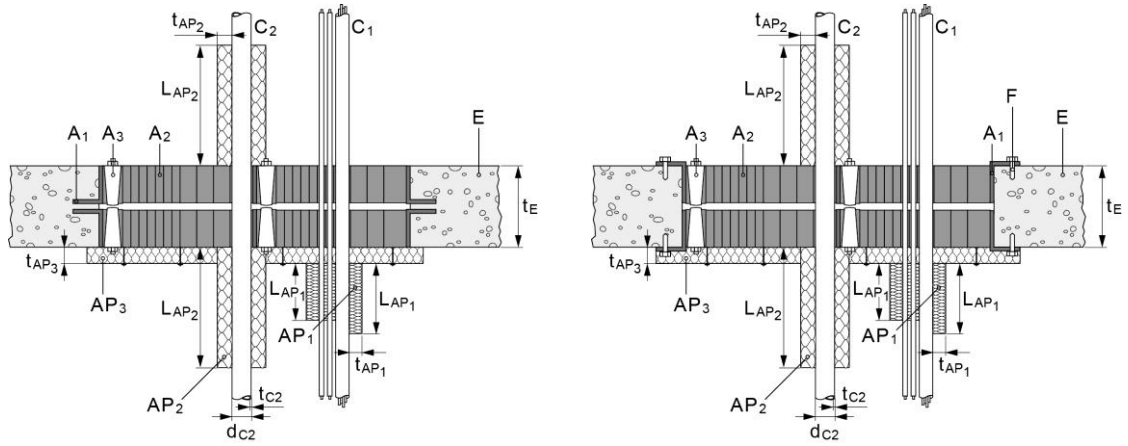


| Cable diameter $C_1$ (mm) | Cable insulation thickness $t_{AP1}$ (mm) | Cable insulation length $L_{AP1}$ (mm) | **Classification** |
|---|---|---|---|
| All sheathed cable types currently and commonly used in building practice in Europe (e.g. power, control, signal, telecommunication, data, optical fibre cables, except waveguide and non-sheathed cables with a diameter of: | | | |
| Small cable group max. Ø 21 mm | 30 | 300 | EI 180 |
| Medium cable group max. Ø 50 mm | 30 | 300 | EI 180 |
| Large cable group max. Ø 80 mm | 30 | 300 | EI 120 / E 180 |

C.3.2.3 Non-combustible pipe penetration - System: CFS-T SBF

Maximum seal size: 504 mm x 562 mm (CFS-T SBF 8+8x4)

| Pipe diameter $d_{C2}$ (mm) | Pipe wall thickness $t_{C2}$ (mm) | Thickness of pipe insulation $t_{AP2}$ (mm) | Length of pipe insulation $L_{AP2}$ (mm) | Arrangement pipe insulation | **Classification** |
|---|---|---|---|---|---|
| 15 - 28 | 1 – 14,2 | ≥ 30 | ≥ 400 | LI | EI 120-C/U, E 180-C/U |
| 28 – 54 | 1/1,5 – 14,2 | ≥ 30 | ≥ 500 | LI | |
| 15 – 28 | 1 – 14,2 | ≥ 30 | - | CI | EI 180 |
| 28 – 54 | 1/1,5 – 14,2 | ≥ 30 | - | CI | EI 180 |

## C.4 Penetration seal system Hilti CFS-T SBS and CFS-T SBSO in rigid walls and floors

according to Annex C.1.1 of the ETA

Maximum distance for first service support: 420 mm.
Maximum seal size 8x4: 595 x 347 mm (width x height).
Maximum seal size 8+8x2: 582 x 262 mm (width x height).
Minimum distances in mm cable and metal pipe penetration seal:

| | | |
|---|---|---|
| $s_1$ = | 5 | (distance between cables and the side seal edge) |
| $s_3$ = | 5 | (distance between cables and upper seal edge) |
| $s_6$ = | 0 | (distance between the insulation of metal pipes and the seal edge) |
| $s_8$ = | 0 | (distance between the insulation of metal pipes) |
| $s_{13}$ = | 90 | (distance between cables and metal pipes) |

The results are also valid for mixed penetration seals

Minimum distances in mm (see illustration of distances below):

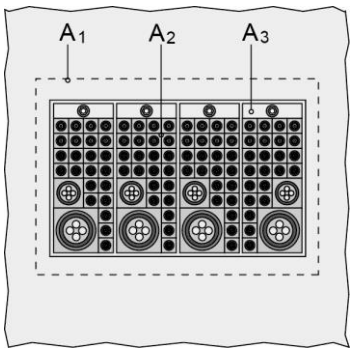


### C.4.1 Rigid Walls according to Annex C.1.1 of the ETA – minimum wall thickness 200 mm

| C.4.1.1 Blank seal (no services) - System: CFS-T SBS and CFS-T SBSO | **Classification** |
|---|---|
| - Single frame<br>Maximum seal size: 277 mm x 120 mm (CFS-T SBS and CFS-T SBSO 8x1),<br>Construction details (for symbols and abbreviations see Annex A of the ETA):<br> 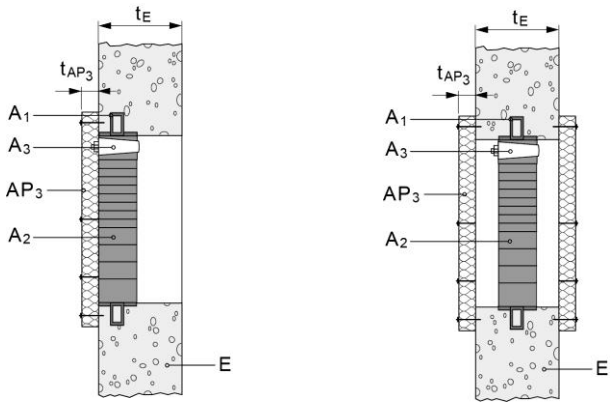 <br> | EI 120 |

C.4.1.2 Cable penetration - System: CFS-T SBS and CFS-T SBSO

Maximum seal size: 595 mm x 347 mm (CFS-T SBS and CFS-T SBSO 8x4)
Maximum seal size: 582 mm x 262 mm (CFS-T SBS and CFS-T SBSO 8+8x2)

Construction details (for symbols and abbreviations see Annex A):

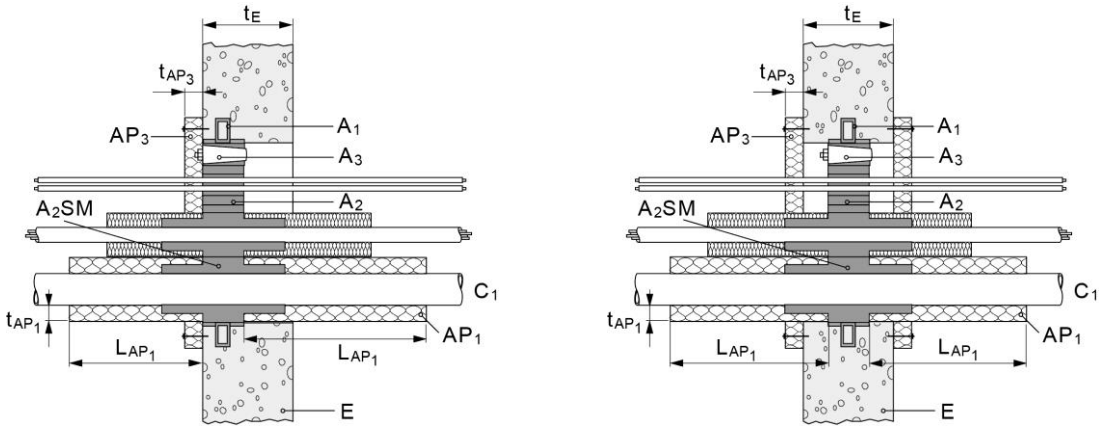


| Cable diameter $C_1$ (mm) | Cable insulation thickness $t_{AP1}$ (mm) | Cable insulation length $L_{AP1}$ (mm) | Super module (CFS-T SM) $A_2SM$ | **Classification** |
|---|---|---|---|---|
| All sheathed cable types currently and commonly used in building practice in Europe (e.g. power, control, signal, telecommunication, data, optical fibre cables, except waveguide and non-sheathed cables) with a diameter of: | | | | |
| Small cable group max. Ø 13 mm | without | without | Without | EI 120 |
| Small cable group max. Ø 21 mm | 30 | 300 | without | EI 120 |
| Medium cable group max. Ø 50 mm | 30 | 300 | yes | EI 120 |
| Large cable group max. Ø 80 mm | 30 | 300 | yes | EI 120 |

## C.4.2 Rigid Floors according to Annex C.1.1 of the ETA – minimum floor thickness 150 mm

| C.4.2.1 Blank seal (no services) - System: CFS-T SBS and CFS-T SBSO | **Classification** |
|---|---|
| Maximum seal size: 595 mm x 347 mm (CFS-T SBS and CFS-T SBSO 8x4),<br>Maximum seal size: 582 mm x 262 mm (CFS-T SBS and CFS-T SBSO 8+8x2)<br>Construction details (for symbols and abbreviations see Annex A of the ETA):<br> 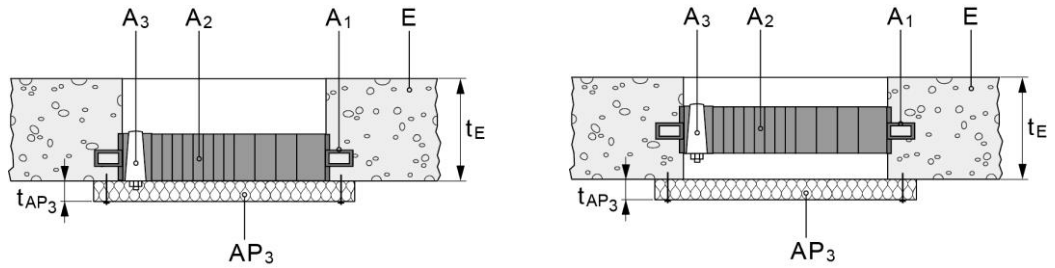 <br> | EI 120 |

| C.4.2.2 Cable penetration - System: CFS-T SBS and CFS-T SBSO |
|---|
| Maximum seal size: 595 mm x 347 mm (CFS-T SBS and CFS-T SBSO 8x4)<br>Maximum seal size: 582 mm x 262 mm (CFS-T SBS and CFS-T SBSO 8+8x2)<br>Construction details (for symbols and abbreviations see Annex A of the ETA):<br> 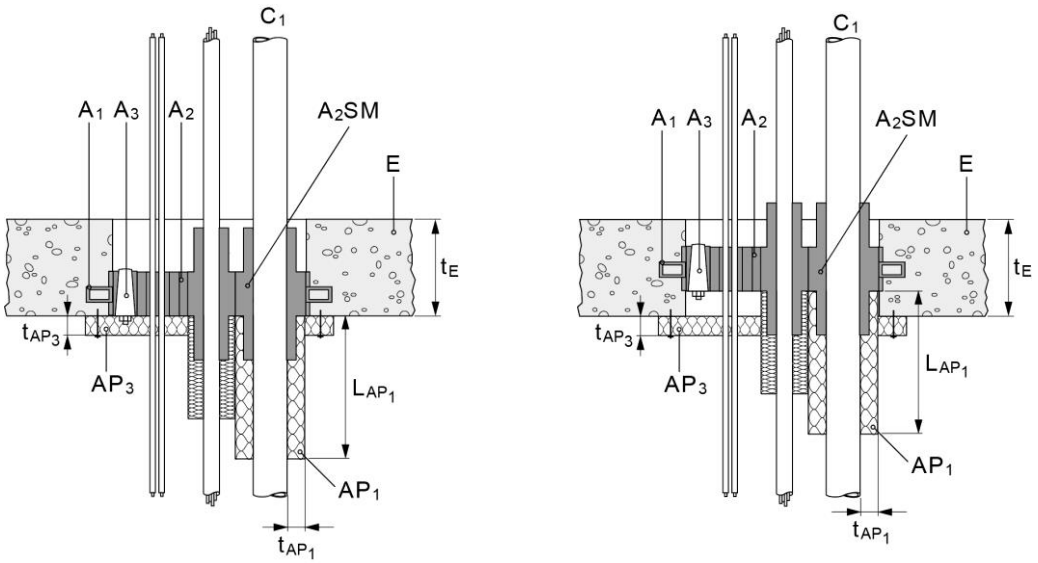 <br> |

| Cable diameter $C_1$ (mm) | Cable insulation thickness $t_{AP1}$ (mm) | Cable insulation length $L_{AP1}$ (mm) | Super module (CFS-T SM) $A_2SM$ | **Classification** |
|---|---|---|---|---|
| All sheathed cable types currently and commonly used in building practice in Europe (e.g. power, control, signal, telecommunication, data, optical fibre cables, except waveguide and non-sheathed cables) with a diameter of: | | | | |
| Small cable group max. Ø 13 mm | without | without | Without | EI 120 |
| Small cable group max. Ø 21 mm | 30 | 300 | without | EI 120 |
| Medium cable group max. Ø 50 mm | 30 | 300 | yes | EI 120 |
| Large cable group max. Ø 80 mm | 30 | 300 | yes | EI 120 |

## C.5 Penetration seal system Hilti CFS-T RR and CFS-T RRS in rigid walls and floors

according to Annex C.1.1 of the ETA

Maximum distance for first service support: 420 mm.
Maximum seal size: Ø 205mm (diameter).
Minimum distances in mm cable and metal pipe penetration seal:

| | | |
|---|---|---|
| $s_1$ = | 5 | (distance between cables and the side seal edge) |
| $s_3$ = | 5 | (distance between cables and upper seal edge) |
| $s_6$ = | 0 | (distance between the insulation of metal pipes and the seal edge) |
| $s_8$ = | 0 | (distance between the insulation of metal pipes) |
| $s_{13}$ = | 90 | (distance between cables and metal pipes) |

Minimum distances in mm (see illustration of distances below):

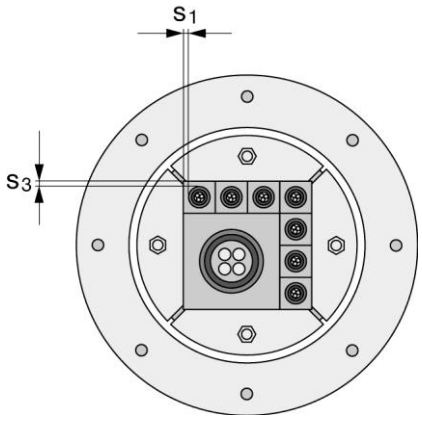


### C.5.1 Rigid Walls according to Annex C.1.1 of the ETA – minimum wall thickness 150 mm

C.5.1.1 Blank seal (no services) - System: CFS-T RR

| Maximum seal size: Ø 205 mm (CFS-T RR-200), | **Classification** |
|---|---|
| Construction details (for symbols and abbreviations see Annex A of the ETA): 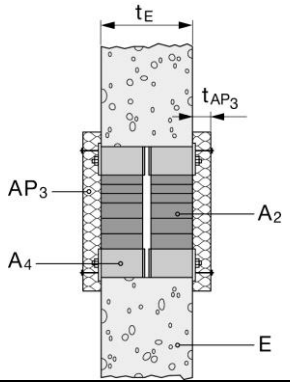  | EI 180 |

C.5.1.2 Cable penetration - System: CFS-T RR

Maximum seal size: Ø 205 mm (CFS-T RR-200)

Construction details (for symbols and abbreviations see Annex A of the ETA):

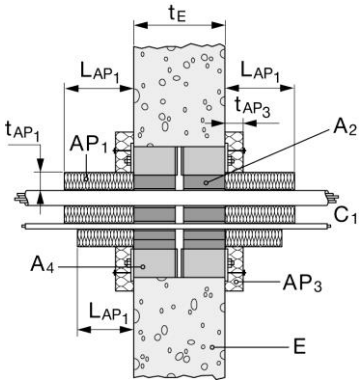


| Cable diameter $C_1$ (mm) | Cable insulation thickness $t_{AP1}$ (mm) | Cable insulation length $L_{AP1}$ (mm) | **Classification** |
|---|---|---|---|
| All sheathed cable types currently and commonly used in building practice in Europe (e.g. power, control, signal, telecommunication, data, optical fibre cables, except waveguide and non-sheathed cables with a diameter of: | | | |
| Small cable group max. Ø 21 mm | 30 | 250 | EI 180 |
| Medium cable group max. Ø 50 mm | 30 | 250 | EI 180 |
| Large cable group max. Ø 80 mm | 30 | 250 | EI 120 |

**C.5.2. Rigid Floors according to Annex C.1.1 of the ETA – minimum floor thickness 200 mm**

C.5.2.1 Blank seal (no services) - System: CFS-T RR

| Maximum seal size: Ø 205 mm (CFS-T RR-200), | **Classification** |
|---|---|
| Construction details (for symbols and abbreviations see Annex A of the ETA): 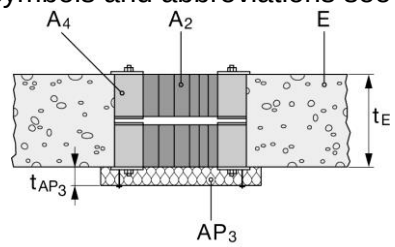  | EI 180 |

| C.5.2.2 Cable penetration - System: CFS-T RR | | | |
|---|---|---|---|
| Maximum seal size: Ø 205 mm (CFS-T RR-200) | | | |
| Construction details (for symbols and abbreviations see Annex A of the ETA): 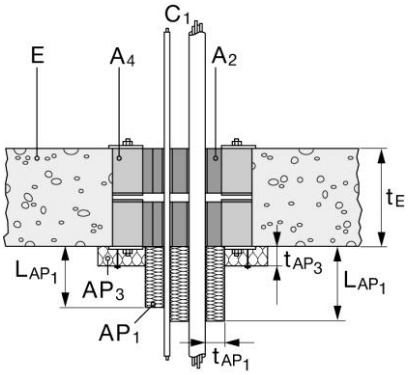  | | | |
| Cable diameter $C_1$ (mm) | Cable insulation thickness $t_{AP1}$ (mm) | Cable insulation length $L_{AP1}$ (mm) | **Classification** |
| All sheathed cable types currently and commonly used in building practice in Europe (e.g. power, control, signal, telecommunication, data, optical fibre cables, except waveguide and non-sheathed cables with a diameter of: | | | |
| Small cable group max. Ø 21 mm | 30 | 300 | EI 180 |
| Medium cable group max. Ø 50 mm | 30 | 300 | EI 180 |
| Large cable group max. Ø 80 mm | 30 | 300 | EI 180 |

| **C.5.3 Rigid Walls according to Annex C.1.1 of the ETA – minimum wall thickness 150 mm** | |
|---|---|
| C.5.3.1 Blank seal (no services) - System: CFS-T RR + CFS-T SLF | |
| Maximum seal size: Ø 205 mm (CFS-T RR-200) | **Classification** |
| Construction details (for symbols and abbreviations see Annex A of the ETA): 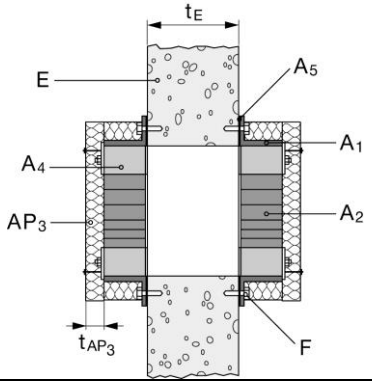  | EI 180 |

C.5.3.2 Cable penetration - System: CFS-T RR + CFS-T SLF

Maximum seal size: Ø 205 mm (CFS-T RR-200)

Construction details (for symbols and abbreviations see Annex A of the ETA):

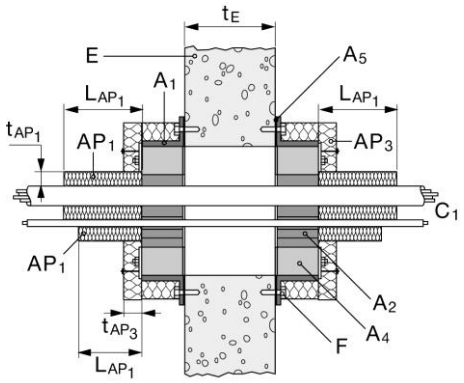


| Cable diameter $C_1$ (mm) | Cable insulation thickness $t_{AP1}$ (mm) | Cable insulation length $L_{AP1}$ (mm) | **Classification** |
|---|---|---|---|
| All sheathed cable types currently and commonly used in building practice in Europe (e.g. power, control, signal, telecommunication, data, optical fibre cables, except waveguide and non-sheathed cables with a diameter of: | | | |
| Small cable group max. Ø 21 mm | 30 | 150 | EI 180 |
| Medium cable group max. Ø 50 mm | 30 | 150 | EI 180 |
| Large cable group max. Ø 80 mm | 30 | 150 | EI 180 |

**C.5.4 Rigid Floors according to Annex C.1.1 of the ETA – minimum floor thickness 200 mm**

C.5.4.1 Blank seal (no services) - System: CFS-T RR + CFS-T SLF

| Maximum seal size: Ø 205 mm (CFS-T RR-200) | **Classification** |
|---|---|
| Construction details (for symbols and abbreviations see Annex A of the ETA): 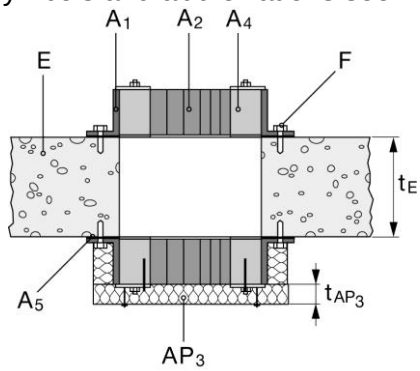  | EI 180 |

C.5.4.2 Cable penetration - System: CFS-T RR + CFS-T SLF

Maximum seal size: Ø 205 mm (CFS-T RR-200)

Construction details (for symbols and abbreviations see Annex A of the ETA):

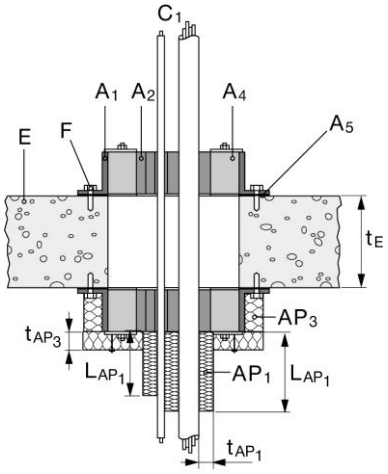


| Cable diameter $C_1$ (mm) | Cable insulation thickness $t_{AP1}$ (mm) | Cable insulation length $L_{AP1}$ (mm) | **Classification** |
|---|---|---|---|
| All sheathed cable types currently and commonly used in building practice in Europe (e.g. power, control, signal, telecommunication, data, optical fibre cables, except waveguide and non-sheathed cables with a diameter of: | | | |
| Small cable group max. Ø 21 mm | 30 | 250 | EI 180 |
| Medium cable group max. Ø 50 mm | 30 | 250 | EI 180 |
| Large cable group max. Ø 80 mm | 30 | 250 | EI 180 |

**C.5.5 Rigid Walls according to Annex C.1.1 of the ETA – minimum wall thickness 150 mm**

C.5.5.1 Blank seal (no services) - System: CFS-T RRS

| Maximum seal size: Ø 103 mm (CFS-T RRS-100) | **Classification** |
|---|---|
| Construction details (for symbols and abbreviations see Annex A of the ETA): 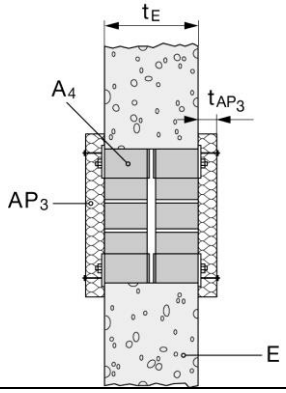  | EI 180 |

C.5.5.2 Cable penetration - System: CFS-T RRS

Maximum seal size: Ø 103 mm (CFS-T RRS-100)

Construction details (for symbols and abbreviations see Annex A of the ETA):

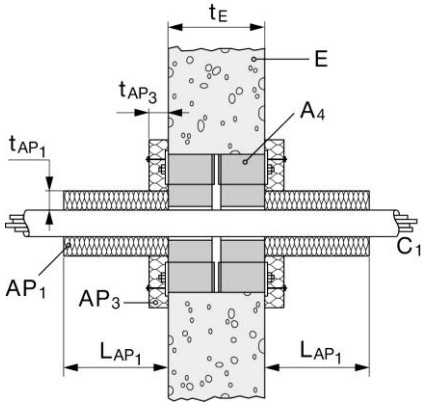


| Cable diameter $C_1$ (mm) | Cable insulation thickness $t_{AP1}$ (mm) | Cable insulation length $L_{AP1}$ (mm) | **Classification** |
|---|---|---|---|
| All sheathed cable types currently and commonly used in building practice in Europe (e.g. power, control, signal, telecommunication, data, optical fibre cables, except waveguide and non-sheathed cables with a diameter of: | | | |
| Small cable group max. Ø 21 mm | 30 | 250 | EI 180 |
| Medium cable group max. Ø 50 mm | 30 | 250 | EI 120 / E 180 |
| Large cable group max. Ø 80 mm | 30 | 250 | EI 120 / E180 |

**C.5.6 Rigid Floors according to Annex C.1.1 of the ETA – minimum floor thickness 200 mm**

C.5.6.1 Blank seal (no services) - System: CFS-T RRS

| Maximum seal size: Ø103mm (CFS-T RRS-100) | **Classification** |
|---|---|
| Construction details (for symbols and abbreviations see Annex A of the ETA): 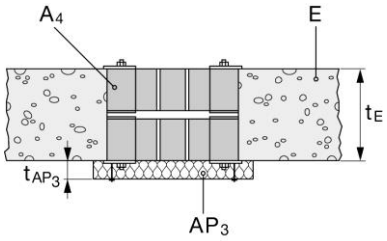  | EI 180 |

C.5.6.2 Cable penetration - System: CFS-T RRS

Maximum seal size: Ø 103 mm (CFS-T RRS-100)

Construction details (for symbols and abbreviations see Annex A of the ETA):

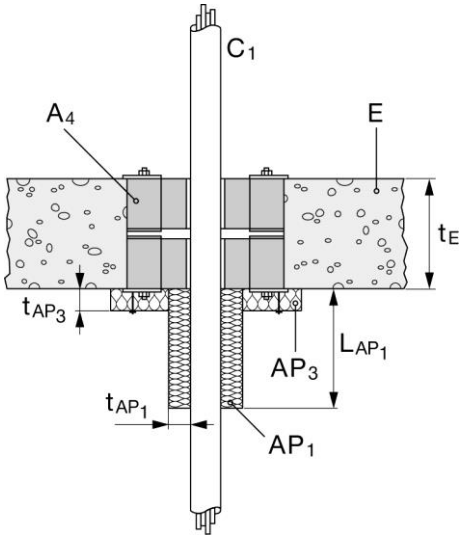


| Cable diameter $C_1$ (mm) | Cable insulation thickness $t_{AP1}$ (mm) | Cable insulation length $L_{AP1}$ (mm) | **Classification** |
|---|---|---|---|
| All sheathed cable types currently and commonly used in building practice in Europe (e.g. power, control, signal, telecommunication, data, optical fibre cables, except waveguide and non-sheathed cables with a diameter of: | | | |
| Small cable group max. Ø 21 mm | 30 | 300 | EI 180 |
| Medium cable group max. Ø 50 mm | 30 | 300 | EI 180 |
| Large cable group max. Ø 80 mm | 30 | 300 | EI 180 |

**C.5.7 Rigid Walls according to Annex C.1.1 of the ETA – minimum wall thickness 150 mm**

C.5.7.1 Blank seal (no services) - System: CFS-T RRS + CFS-T SLF

| Maximum seal size: Ø103mm (CFS-T RRS-100) | **Classification** |
|---|---|
| Construction details (for symbols and abbreviations see Annex A of the ETA): 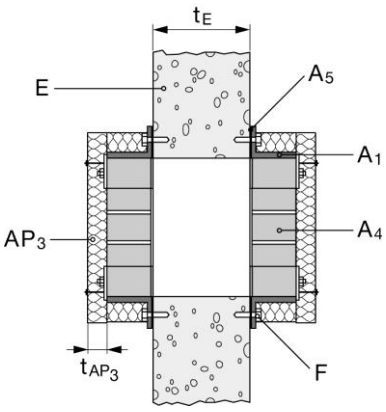  | EI 180 |

C.5.7.2 Cable penetration - System: CFS-T RRS + CFS-T SLF

Maximum seal size: Ø 103 mm (CFS-T RRS-100)

Construction details (for symbols and abbreviations see Annex A of the ETA):

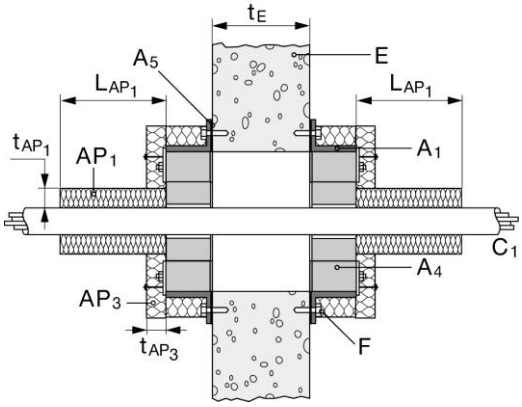


| Cable diameter $C_1$ (mm) | Cable insulation thickness $t_{AP1}$ (mm) | Cable insulation length $L_{AP1}$ (mm) | **Classification** |
|---|---|---|---|
| All sheathed cable types currently and commonly used in building practice in Europe (e.g. power, control, signal, telecommunication, data, optical fibre cables, except waveguide and non-sheathed cables with a diameter of: | | | |
| Small cable group max. Ø 21 mm | 30 | 150 | EI 180 |
| Medium cable group max. Ø 50 mm | 30 | 150 | EI 180 |
| Large cable group max. Ø 80 mm | 30 | 150 | EI 180 |

**C.5.8 Rigid Floors according to Annex C.1.1 of the ETA – minimum floor thickness 200 mm**

C.5.8.1 Blank seal (no services) - System: CFS-T RRS + CFS-T SLF

| Maximum seal size: Ø 103 mm (CFS-T RRS-100) | **Classification** |
|---|---|
| Construction details (for symbols and abbreviations see Annex A of the ETA): 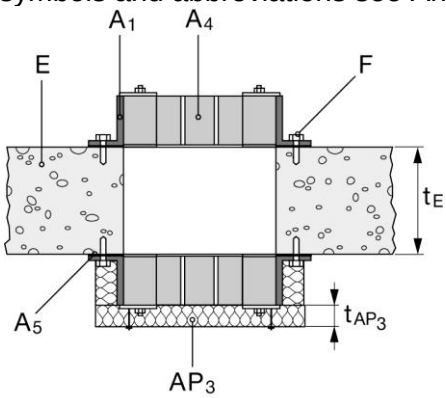  | EI 180 |

C.5.8.2 Cable penetration - System: CFS-T RRS + CFS-T SLF

Maximum seal size: Ø 103 mm (CFS-T RRS-100)

Construction details (for symbols and abbreviations see Annex A of the ETA):

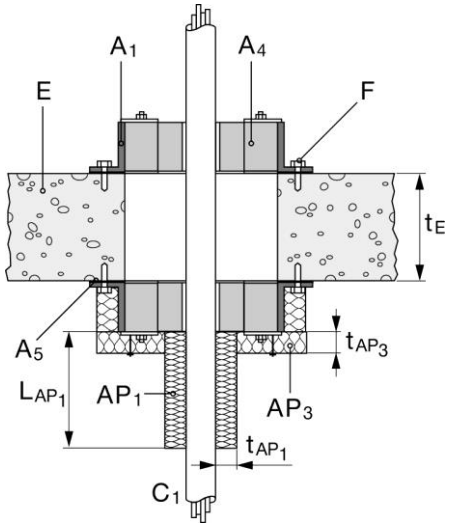


| Cable diameter $C_1$ (mm) | Cable insulation thickness $t_{AP1}$ (mm) | Cable insulation length $L_{AP1}$ (mm) | **Classification** |
|---|---|---|---|
| All sheathed cable types currently and commonly used in building practice in Europe (e.g. power, control, signal, telecommunication, data, optical fibre cables, except waveguide and non-sheathed cables with a diameter of: | | | |
| Small cable group max. Ø 21 mm | 30 | 25 | EI 180 |
| Medium cable group max. Ø 50 mm | 30 | 250 | EI 180 |
| Large cable group max. Ø 80 mm | 30 | 250 | EI 180 |

## C.6 Penetration seal system Hilti CFS-T RR Vario in rigid walls and floors

according to Annex C.1.1 of the ETA

Maximum distance for first service support: 325 mm.
Maximum seal size: Ø 304 mm (diameter).
Minimum distances in mm cable penetration seal:

$s_1$ = 7,5 (distance between cables and the side seal edge)
$s_{14}$ = 6,25 (distance between two cables)

Minimum distances in mm (see illustration of distances below):

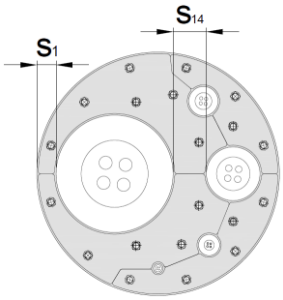


### C.6.1 Rigid Walls according to Annex C.1.1 of the ETA – minimum wall thickness 200 mm

C.6.1.1 Cable penetration - System: CFS-T RR Vario

Maximum seal size: Ø 302 mm (CFS-T RR Vario 300)

Construction details (for symbols and abbreviations see Annex A of the ETA):

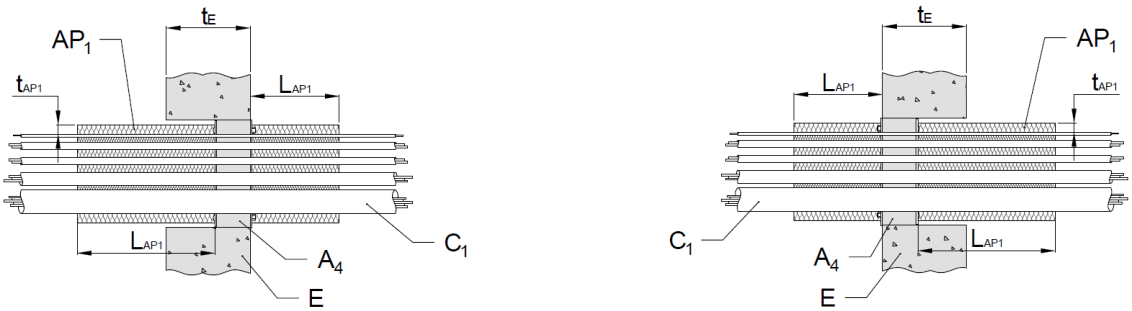


| Cable diameter $C_1$ (mm) | Cable insulation thickness $t_{AP1}$ (mm) | Cable insulation length $L_{AP1}$ (mm) | **Classification** |
|---|---|---|---|
| All sheathed cable types currently and commonly used in building practice in Europe (e.g. power, control, signal, telecommunication, data, optical fibre cables, except waveguide and non-sheathed cables with a diameter of: | | | |
| Small cable group max. Ø 21 mm | 20 | 300 / 440* | EI 120 |
| Medium cable group max. Ø 50 mm | 20 | 300 / 440* | EI 90<br>E 120 |
| Large cable group max. Ø 80 mm | 20 | 300 / 440* | EI 90<br>E 120 |
| Special cable Ø min.80 mm - max.143 mm (SüdKabel GmbH 2XS(FL)2Y-2LWL 1x2500RMS / 250 380 kV or similar) | 20 | 300 / 440* | EI 90<br>E 120 |

* Please check the section drawings above for the correct length and application side (exposed or unexposed) of the cable insulation.

## C.6.2. Rigid Floors according to Annex C.1.1 of the ETA – minimum floor thickness 200 mm

C.6.2.1 Cable penetration - System: CFS-T RR Vario

Maximum seal size: Ø 302 mm (CFS-T RR Vario 300)

Construction details (for symbols and abbreviations see Annex A of the ETA):

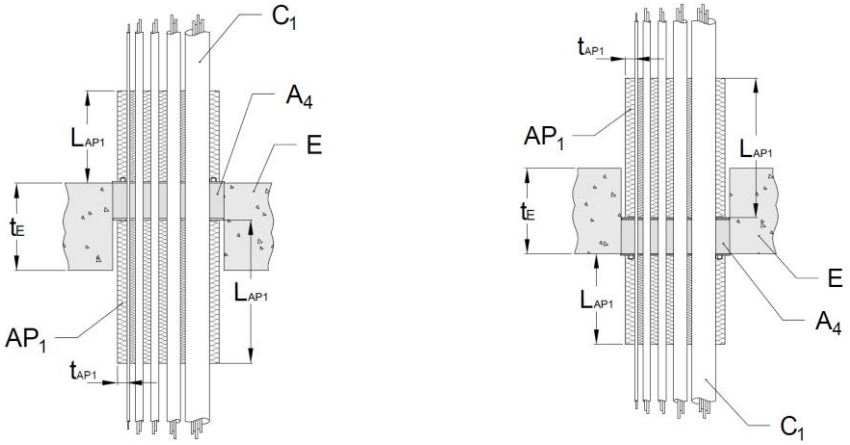


| Cable diameter $C_1$ (mm) | Cable insulation thickness $t_{AP1}$ (mm) | Cable insulation length $L_{AP1}$ (mm) | **Classification** |
|---|---|---|---|
| All sheathed cable types currently and commonly used in building practice in Europe (e.g. power, control, signal, telecommunication, data, optical fibre cables, except waveguide and non-sheathed cables with a diameter of: | | | |
| Small cable group max. Ø 21 mm | 20 | 300 / 440* | EI 120 |
| Medium cable group max. Ø 50 mm | 20 | 300 / 440* | EI 120 |
| Large cable group max. Ø 80 mm | 20 | 300 / 440* | EI 120 |
| Special cable Ø min.80 mm - max.143 mm (SüdKabel GmbH 2XS(FL)2Y-2LWL 1x2500RMS / 250 380 kV or similar) | 20 | 300 / 440* | EI 120 |

* Please check the section drawings above for the correct length and application side (exposed or unexposed) of the cable insulation.

## C.6.3 Rigid Walls according to Annex C.1.1 of the ETA – minimum wall thickness 200 mm

C.6.3.1 Cable penetration - System: CFS-T RR Vario + CFS-T SST

Maximum seal size: Ø 304 mm (CFS-T RR Vario 300)

Construction details (for symbols and abbreviations see Annex A of the ETA):

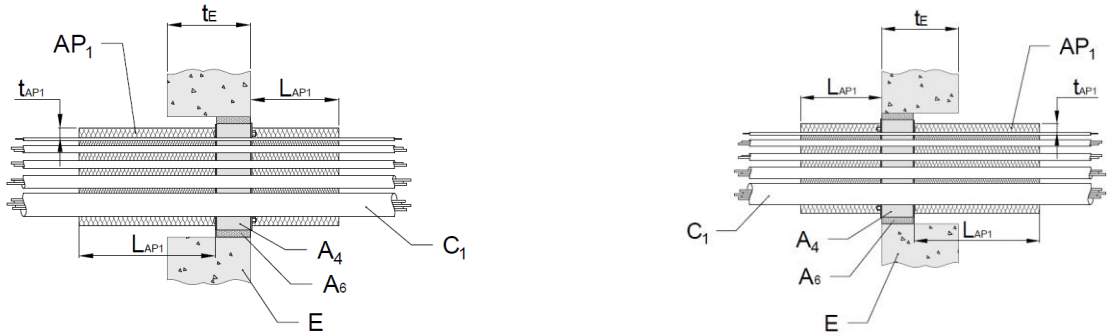


| Cable diameter $C_1$ (mm) | Cable insulation thickness $t_{AP1}$ (mm) | Cable insulation length $L_{AP1}$ (mm) | **Classification** |
|---|---|---|---|
| All sheathed cable types currently and commonly used in building practice in Europe (e.g. power, control, signal, telecommunication, data, optical fibre cables, except waveguide and non-sheathed cables with a diameter of: | | | |
| Small cable group max. Ø 21 mm | 20 | 300 / 440* | EI 120 |
| Medium cable group max. Ø 50 mm | 20 | 300 / 440* | EI 60<br>E 120 |
| Large cable group max. Ø 80 mm | 20 | 300 / 440* | EI 60<br>E 120 |
| Special cable Ø min.80 mm - max.143 mm (SüdKabel GmbH 2XS(FL)2Y-2LWL 1x2500RMS / 250 380 kV or similar) | 20 | 300 / 440* | EI 60<br>E 120 |

* Please check the section drawings above for the correct length and application side (exposed or unexposed) of the cable insulation.

## C.6.4 Rigid Floors according to Annex C.1.1 of the ETA – minimum floor thickness 200 mm

C.6.4.1 Cable penetration - System: CFS-T RR Vario + CFS-T SST

Maximum seal size: Ø 304 mm (CFS-T RR Vario 300)

Construction details (for symbols and abbreviations see Annex A of the ETA):

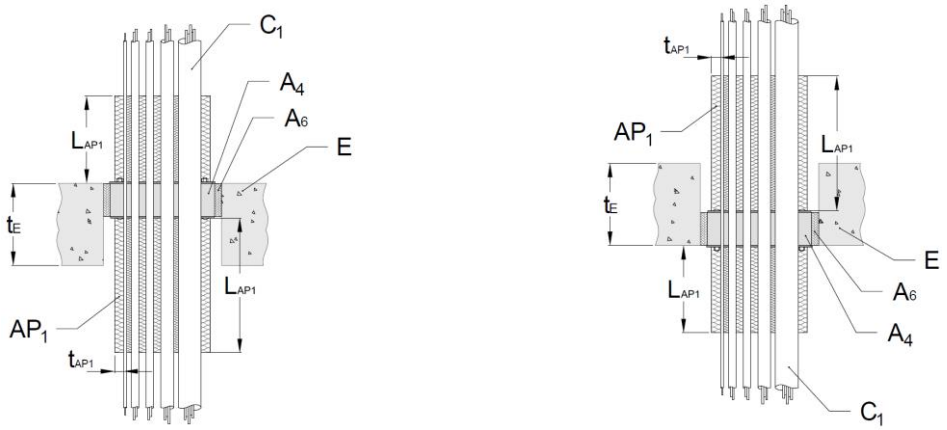


| Cable diameter $C_1$ (mm) | Cable insulation thickness $t_{AP1}$ (mm) | Cable insulation length $L_{AP1}$ (mm) | **Classification** |
|---|---|---|---|
| All sheathed cable types currently and commonly used in building practice in Europe (e.g. power, control, signal, telecommunication, data, optical fibre cables, except waveguide and non-sheathed cables with a diameter of: | | | |
| Small cable group max. Ø 21 mm | 20 | 300 / 440* | EI 120 |
| Medium cable group max. Ø 50 mm | 20 | 300 / 440* | EI 60<br>E 120 |
| Large cable group max. Ø 80 mm | 20 | 300 / 440* | EI 60<br>E 120 |
| Special cable Ø min.80 mm - max.143 mm (SüdKabel GmbH 2XS(FL)2Y-2LWL 1x2500RMS / 250 380 kV or similar) | 20 | 300 / 440* | EI 60<br>E 120 |

* Please check the section drawings above for the correct length and application side (exposed or unexposed) of the cable insulation.

## C.7 Penetration seal system Hilti CFS-T RR Vario (H) in rigid walls and floors

according to Annex C.1.1 of the ETA

Maximum distance for first service support: 325 mm.
Maximum seal size: Ø 302 mm (diameter).
Minimum distances in mm cable penetration seal:
$s_1$ = 7,5 (distance between cables and the side seal edge)
$s_{14}$ = 6,25 (distance between two cables)

Minimum distances in mm (see illustration of distances below):

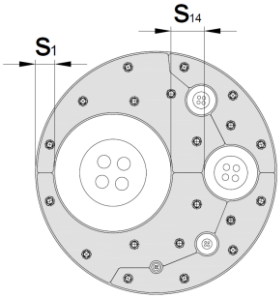


### C.7.1 Rigid Walls according to Annex C.1.1 of the ETA – minimum wall thickness 200 mm

C.7.1.1 Cable penetration - System: CFS-T RR Vario (H)

Maximum seal size: Ø 302 mm (CFS-T RR Vario (H) 300)

Construction details (for symbols and abbreviations see Annex A of the ETA):

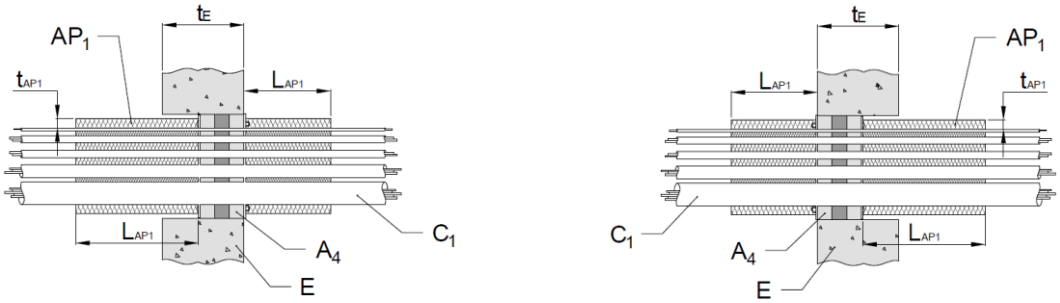


| Cable diameter $C_1$ (mm) | Cable insulation thickness $t_{AP1}$ (mm) | Cable insulation length $L_{AP1}$ (mm) | **Classification** |
|---|---|---|---|
| All sheathed cable types currently and commonly used in building practice in Europe (e.g. power, control, signal, telecommunication, data, optical fibre cables, except waveguide and non-sheathed cables with a diameter of: | | | |
| Small cable group max. Ø 21 mm | 20 | 300 / 410* | EI 120 |
| Medium cable group max. Ø 50 mm | 20 | 300 / 410* | EI 120 / 90<br>E 120 |
| Large cable group max. Ø 80 mm | 20 | 300 / 410* | EI 120 / 90<br>E 120 |
| Special cable Ø min.80 mm - max.143 mm (SüdKabel GmbH 2XS(FL)2Y-2LWL 1x2500RMS / 250 380 kV or similar) | 20 | 300 / 410* | EI 120 / 90<br>E 120 |

* Please check the section drawings above for the correct length and application side (exposed or unexposed) of the cable insulation.

## C.7.2 Rigid Floors according to Annex C.1.1 of the ETA – minimum floor thickness 200 mm

C.7.2.1 Cable penetration - System: CFS-T RR Vario (H)

Maximum seal size: Ø 302 mm (CFS-T RR Vario (H) 300)

Construction details (for symbols and abbreviations see Annex A of the ETA):

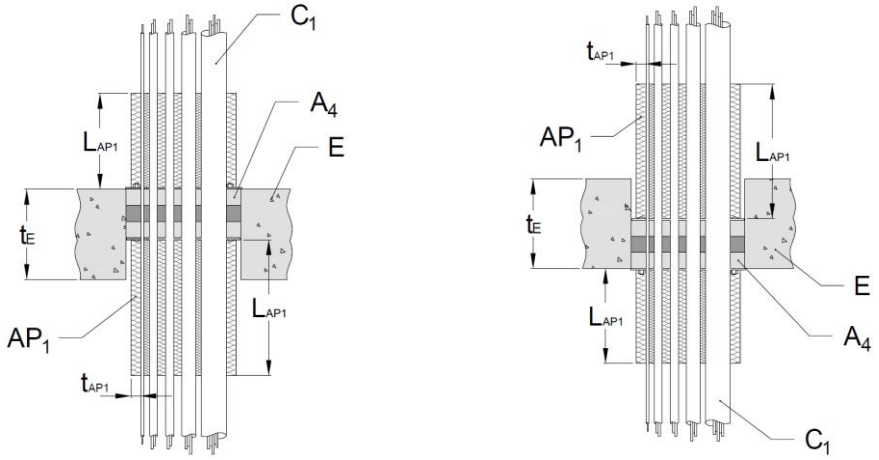


| Cable diameter $C_1$ (mm) | Cable insulation thickness $t_{AP1}$ (mm) | Cable insulation length $L_{AP1}$ (mm) | **Classification** |
|---|---|---|---|
| All sheathed cable types currently and commonly used in building practice in Europe (e.g. power, control, signal, telecommunication, data, optical fibre cables, except waveguide and non-sheathed cables with a diameter of: | | | |
| Small cable group max. Ø 21 mm | 20 | 300 / 410* | EI 120 |
| Medium cable group max. Ø 50 mm | 20 | 300 / 410* | EI 120 |
| Large cable group max. Ø 80 mm | 20 | 300 / 410* | EI 120 |
| Special cable Ø min.80 mm - max.143 mm (SüdKabel GmbH 2XS(FL)2Y-2LWL 1x2500RMS / 250 380 kV or similar) | 20 | 300 / 410* | EI 120 |

* Please check the section drawings above for the correct length and application side (exposed or unexposed) of the cable insulation.

## C.8 Penetration seal system Hilti CFS-T RR3 in rigid walls and floors

according to Annex C.1.1 of the ETA

Maximum distance for first service support: 325 mm.
Maximum seal size: Ø 202 mm (diameter).
Minimum distances in mm cable penetration seal:

$s_1$ = 11 (distance between cables and the side seal edge)
$s_{14}$ = 9 (distance between two cables)

Minimum distances in mm (see illustration of distances below):

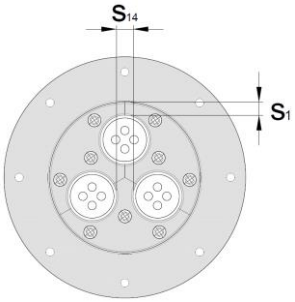


### C.8.1 Rigid Walls according to Annex C.1.1 of the ETA – minimum wall thickness 200 mm

C.8.1.1 Cable penetration - System: CFS-T RR3

Maximum seal size: Ø 202 mm (CFS-T RR3 200)

Construction details (for symbols and abbreviations see Annex A of the ETA):

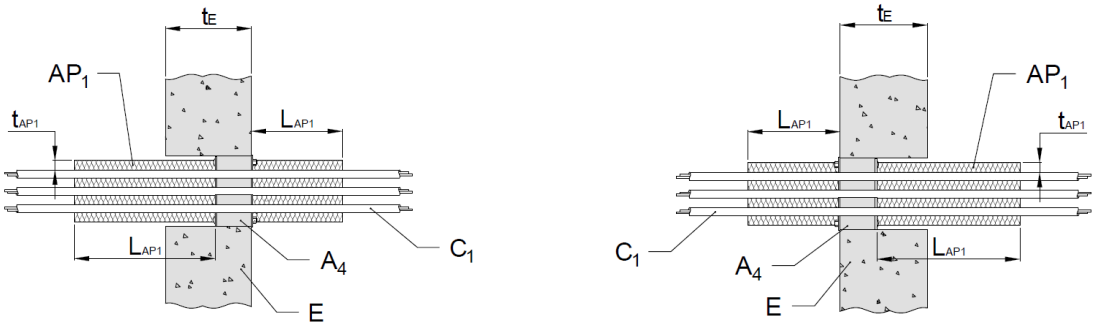


| Cable diameter $C_1$ (mm) | Cable insulation thickness $t_{AP1}$ (mm) | Cable insulation length $L_{AP1}$ (mm) | **Classification** |
|---|---|---|---|
| All sheathed cable types currently and commonly used in building practice in Europe (e.g. power, control, signal, telecommunication, data, optical fibre cables, except waveguide and non-sheathed cables with a diameter of: | | | |
| Small cable group max. Ø 21 mm | --- | --- | --- |
| Medium cable group max. Ø 50 mm | 20 | 300 / 440* | EI 120 / 90<br>E 120 |
| Large cable group max. Ø 80 mm | 20 | 300 / 440* | EI 120 |

* Please check the section drawings above for the correct length and application side (exposed or unexposed) of the cable insulation.

## C.8.2 Rigid Floors according to Annex C.1.1 of the ETA – minimum floor thickness 200 mm

C.8.2.1 Cable penetration - System: CFS-T RR3

Maximum seal size: Ø 202 mm (CFS-T RR3 200)

Construction details (for symbols and abbreviations see Annex A of the ETA):

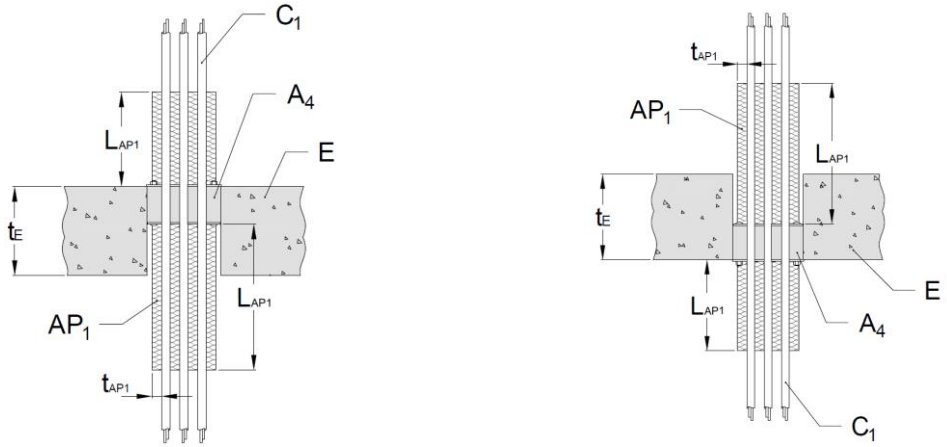


| Cable diameter $C_1$ (mm) | Cable insulation thickness $t_{AP1}$ (mm) | Cable insulation length $L_{AP1}$ (mm) | **Classification** |
|---|---|---|---|
| All sheathed cable types currently and commonly used in building practice in Europe (e.g. power, control, signal, telecommunication, data, optical fibre cables, except waveguide and non-sheathed cables with a diameter of: | | | |
| Small cable group max. Ø 21 mm | --- | --- | --- |
| Medium cable group max. Ø 50 mm | 20 | 300 / 440* | EI 120 |
| Large cable group max. Ø 80 mm | 20 | 300 / 440* | EI 120 |

* Please check the section drawings above for the correct length and application side (exposed or unexposed) of the cable insulation.

**C.8.3 Rigid Walls according to Annex C.1.1 of the ETA – minimum wall thickness 200 mm**

C.8.3.1 Cable penetration - System: CFS-T RR3 + CFS-T SLF

Maximum seal size: Ø 202 mm (CFS-T RR3 200)

Construction details (for symbols and abbreviations see Annex A of the ETA):

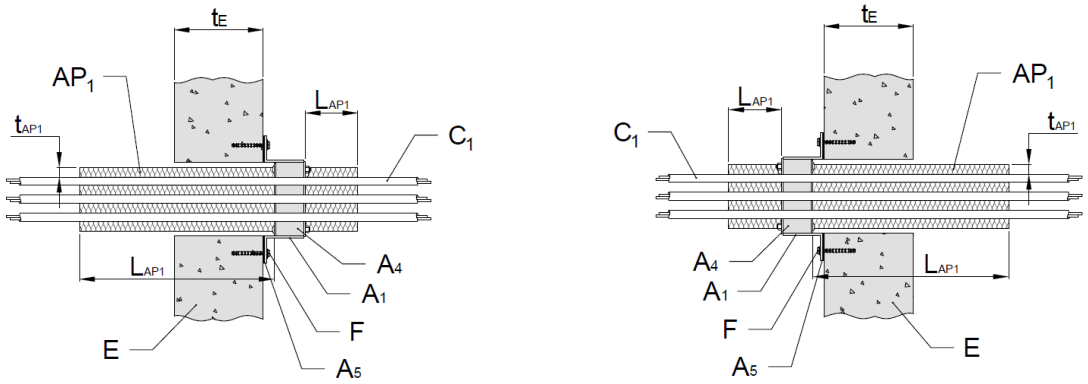


| Cable diameter $C_1$ (mm) | Cable insulation thickness $t_{AP1}$ (mm) | Cable insulation length $L_{AP1}$ (mm) | **Classification** |
|---|---|---|---|
| All sheathed cable types currently and commonly used in building practice in Europe (e.g. power, control, signal, telecommunication, data, optical fibre cables, except waveguide and non-sheathed cables with a diameter of: | | | |
| Small cable group max. Ø 21 mm | --- | --- | --- |
| Medium cable group max. Ø 50 mm | 20 | 220 / 520* | EI 120 / 45 |
| Large cable group max. Ø 80 mm | 20 | 220 / 520* | EI 120 |

* Please check the section drawings above for the correct length and application side (exposed or unexposed) of the cable insulation.

**C.8.4 Rigid Floors according to Annex C.1.1 of the ETA – minimum floor thickness 200 mm**

C.8.4.1 Cable penetration - System: CFS-T RR3 + CFS-T SLF

Maximum seal size: Ø 202 mm (CFS-T RR3 200)

Construction details (for symbols and abbreviations see Annex A of the ETA):

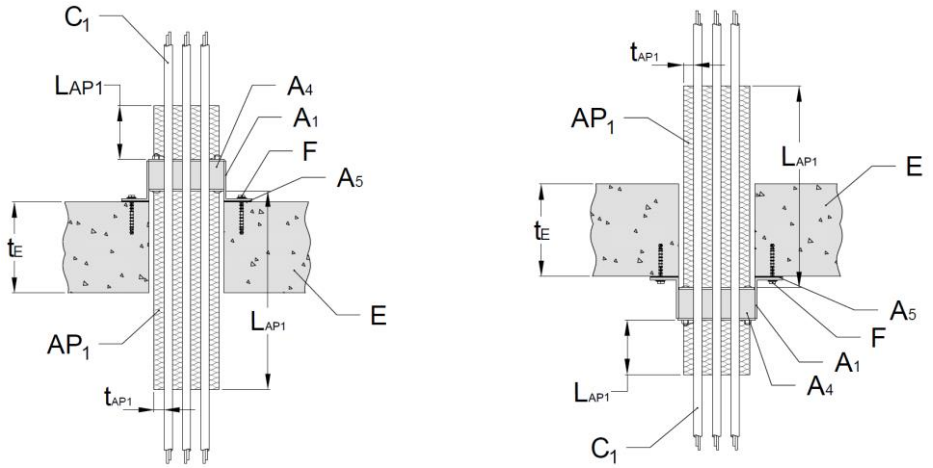


| Cable diameter $C_1$ (mm) | Cable insulation thickness $t_{AP1}$ (mm) | Cable insulation length $L_{AP1}$ (mm) | **Classification** |
|---|---|---|---|
| All sheathed cable types currently and commonly used in building practice in Europe (e.g. power, control, signal, telecommunication, data, optical fibre cables, except waveguide and non-sheathed cables with a diameter of: | | | |
| Small cable group max. Ø 21 mm | --- | --- | --- |
| Medium cable group max. Ø 50 mm | 20 | 220 / 520* | EI 120 / 30 |
| Large cable group max. Ø 80 mm | 20 | 220 / 520* | EI 120 |

* Please check the section drawings above for the correct length and application side (exposed or unexposed) of the cable insulation.

## ANNEX D - ABBREVIATIONS USED IN DRAWINGS

| Abbreviation | Description |
|---|---|
| $A_1$ | Hilti Firestop Cable Transit Frame (Sleeve) |
| $A_2$ | Hilti Firestop Cable Transit Modules |
| $A_2SM$ | Hilti Firestop Cable Transit Super Modules |
| $A_3$ | Hilti Firestop Cable Transit Wedge |
| $A_4$ | Hilti Firestop Cable Transit Plug Seal |
| $A_5$ | Sealing with Hilti Firestop Acrylic Sealant CFS-S ACR |
| $A_6$ | Sealing Strip Hilti CFS-T SST |
| $C_1$ | Cable |
| $C_2$ | Pipe |
| $d_{C2}$ | Pipe diameter (nominal outside diameter) |
| $AP_1$ | Cable Insulation |
| $AP_2$ | Pipe Insulation |
| $AP_3$ | Transit Frame Insulation |
| E | Building element (wall, floor) |
| F | Fixing of the frame (sleeve) |
| $s_1$ | Minimum distance between single penetration seals |
| $t_{C2}$ | Pipe wall thickness |
| $t_{AP1}$ | Insulation thickness / cable |
| $t_{AP2}$ | Insulation thickness / pipe |
| $t_{AP3}$ | Insulation thickness / transit frame |
| $t_E$ | Thickness of the building element |
| $L_{AP1}$ | Length of Cable Insulation |
| $L_{AP2}$ | Length of Pipe Insulation |